Curs 8

2023/2024

Dispozitive şi circuite de microunde pentru radiocomunicații

Disciplina 2023/2024

- 2C/1L (+1), **DCMR (CDM)**
- **Minim 7 prezente (curs+laborator)**
- Curs - **conf. Radu Damian**
  - Miercuri 08(**:15**)-17, ~~Online~~/**Video (istoric)**, P5
  - E – **50%** din nota
  - **probleme** + (2p prez. curs) + (3 teste) + (bonus activitate)
    - primul test L1: 04.10.2023 (t2 si t3 neanuntate la **curs**)
    - 3pz (C) ≈ +0.5p (**2p** max)
  - **toate materialele permise**

Disciplina 2023/2024

- 2C/1L, **DCMR (CDM)**
- Laborator – **conf. Radu Damian**
  - Miercuri/Joi/Vineri, par/impar, **II.13**
  - L – **25%** din nota
    - ADS, 4 sedinte aplicatii
    - prezenta + **rezultate personale!**
  - P – **25%** din nota
    - ADS, 3 sedinte aplicatii (-1? 21-22.12.2022)
    - tema personala

Cuprins

- Linii de transmisie
- Adaptarea de impedanța
- Cuploare direcționale
- Divizoare de putere
- Amplificatoare de microunde
- Filtre de microunde
- Oscilatoare de microunde ?

Bibliografie

- http://rf-opto.etti.tuiasi.ro
- Irinel Casian-Botez: "Microunde vol. 1: Proiectarea de circuit", Ed. TEHNOPRES, 2008
- **David Pozar, Microwave Engineering, Wiley; 4th edition , 2011, ISBN : 978-1-118-29813-8 (E), ISBN : 978-0-470-63155-3 (P)**

Examen: Reprezentare logaritmică

$dB = 10 \cdot \log_{10} (P_2 / P_1)$

0 dB	= 1
+ 0.1 dB	= 1.023 (+2.3%)
+ 3 dB	= 2
+ 5 dB	= 3
+ 10 dB	= 10
-3 dB	= 0.5
-10 dB	= 0.1
-20 dB	= 0.01
-30 dB	= 0.001

$dBm = 10 \cdot \log_{10} (P / 1\ mW)$

0 dBm	= 1 mW
3 dBm	= 2 mW
5 dBm	= 3 mW
10 dBm	= 10 mW
20 dBm	= 100 mW
-3 dBm	= 0.5 mW
-10 dBm	= 100 μW
-30 dBm	= 1 μW
-60 dBm	= 1 nW

[dBm] + [dB] = [dBm]

[dBm/Hz] + [dB] = [dBm/Hz]

[x] + [dB] = [x]

Linii de transmisie in mod TEM

Cuprins

- Linii de transmisie
- Adaptarea de impedanța
- Cuploare direcționale
- Divizoare de putere
- Amplificatoare de microunde
- Filtre de microunde
- Oscilatoare de microunde ?

Linie fara pierderi

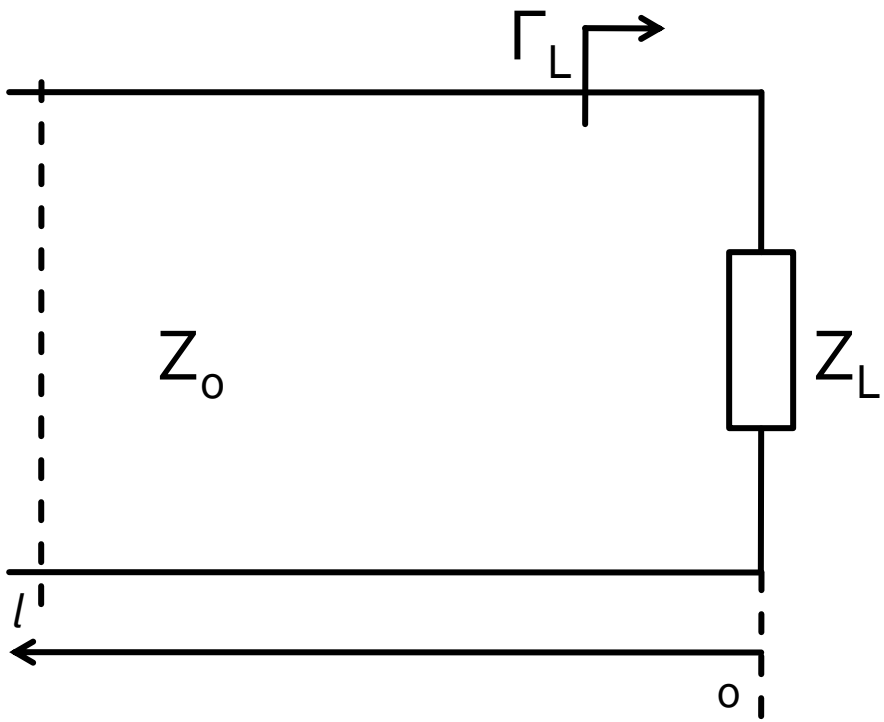

$$V(z) = V_0^+ e^{-j\cdot\beta\cdot z} + V_0^- e^{j\cdot\beta\cdot z}$$

$$I(z) = \frac{V_0^+}{Z_0} e^{-j\cdot\beta\cdot z} - \frac{V_0^-}{Z_0} e^{j\cdot\beta\cdot z}$$

$$Z_L = \frac{V(0)}{I(0)} \qquad Z_L = \frac{V_0^+ + V_0^-}{V_0^+ - V_0^-} \cdot Z_0$$

- coeficient de reflexie in tensiune

$$\boxed{\Gamma = \frac{V_0^-}{V_0^+} = \frac{Z_L - Z_0}{Z_L + Z_0}}$$

- Z_o real

Linie fara pierderi

- impedanta la intrarea liniei de impedanta caracteristica Z_o, de lungime l, terminata cu impedanta Z_L

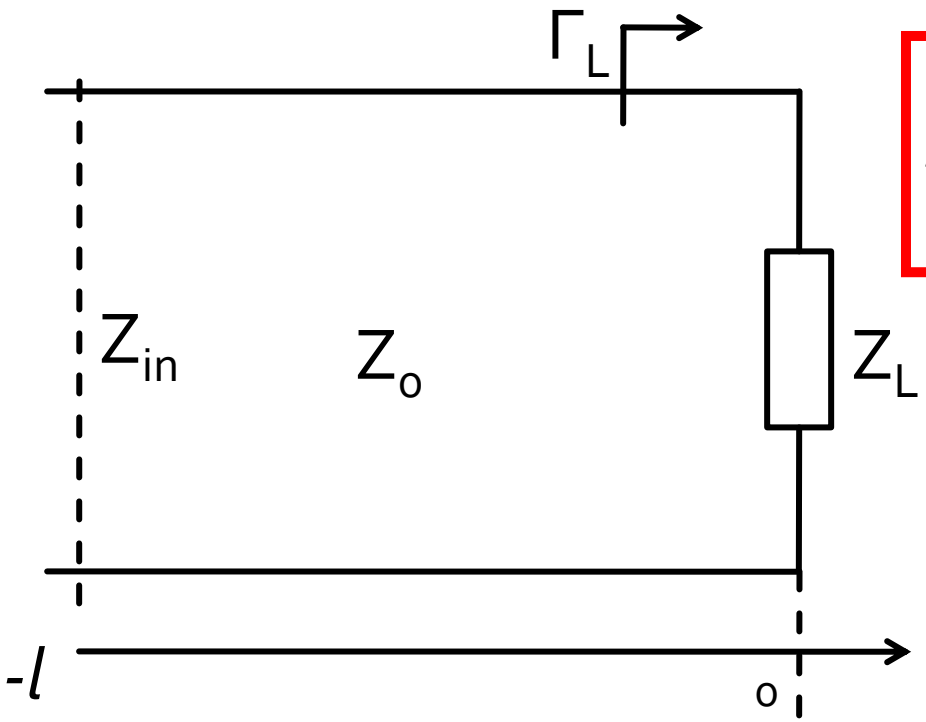

$$Z_{in} = Z_0 \cdot \frac{Z_L + j \cdot Z_0 \cdot \tan \beta \cdot l}{Z_0 + j \cdot Z_L \cdot \tan \beta \cdot l}$$

Cuprins

- Linii de transmisie
- Adaptarea de impedanța
- Cuploare direcționale
- Divizoare de putere
- Amplificatoare de microunde
- Filtre de microunde
- Oscilatoare de microunde ?

Adaptare dpdv al puterii

$$Z_L = Z_i^*$$

Daca se alege un Zo real

$$\Gamma = \frac{Z - Z_0}{Z + Z_0}$$

$$\Gamma_L = \Gamma_i^*$$

- numere complexe
- in planul complex

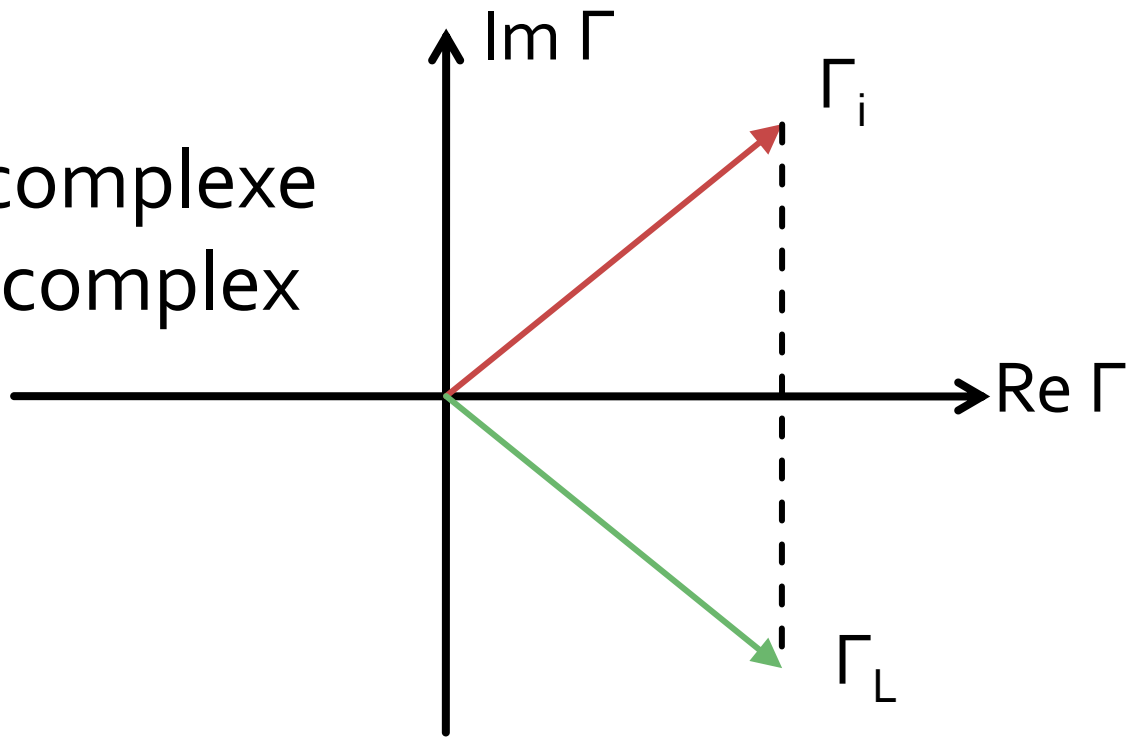

Reflexie de putere / Model

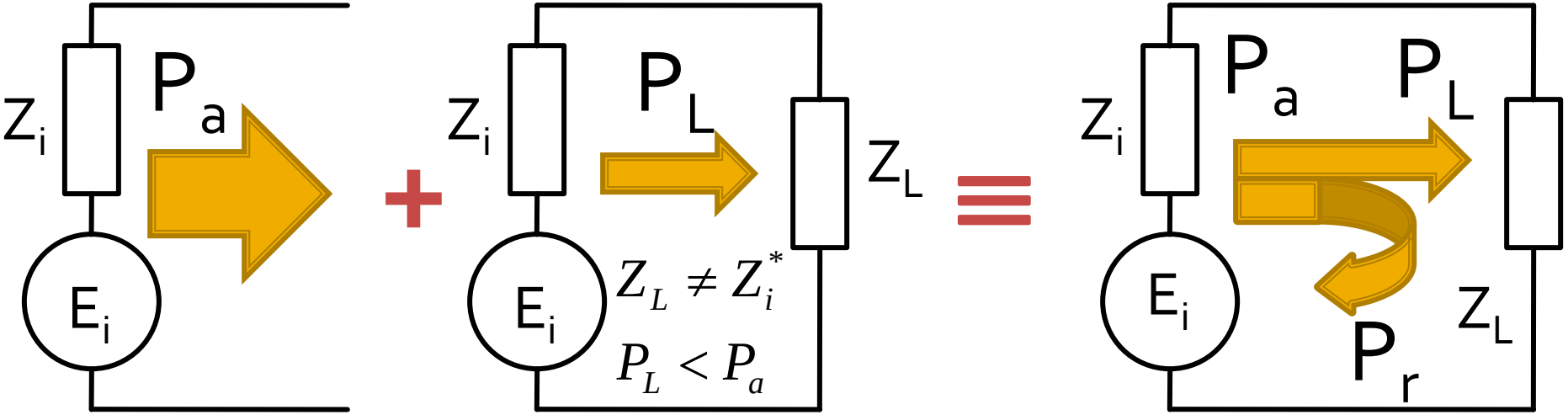

- Generatorul are posibilitatea de a oferi o anumita putere maxima de semnal P_a
- Pentru o sarcina oarecare, acesteia i se ofera o putere de semnal mai mica $P_L < P_a$
- Se intampla **"ca si cum"** (model) o parte din putere se reflecta $P_r = P_a - P_L$
- Puterea este o marime **scalara!**

Adaptarea de impedanța

Diagrama Smith

Cuprins

- Linii de transmisie
- Adaptarea de impedanța
- Cuploare direcționale
- Divizoare de putere
- Amplificatoare de microunde
- Filtre de microunde
- Oscilatoare de microunde ?

Diagrama Smith

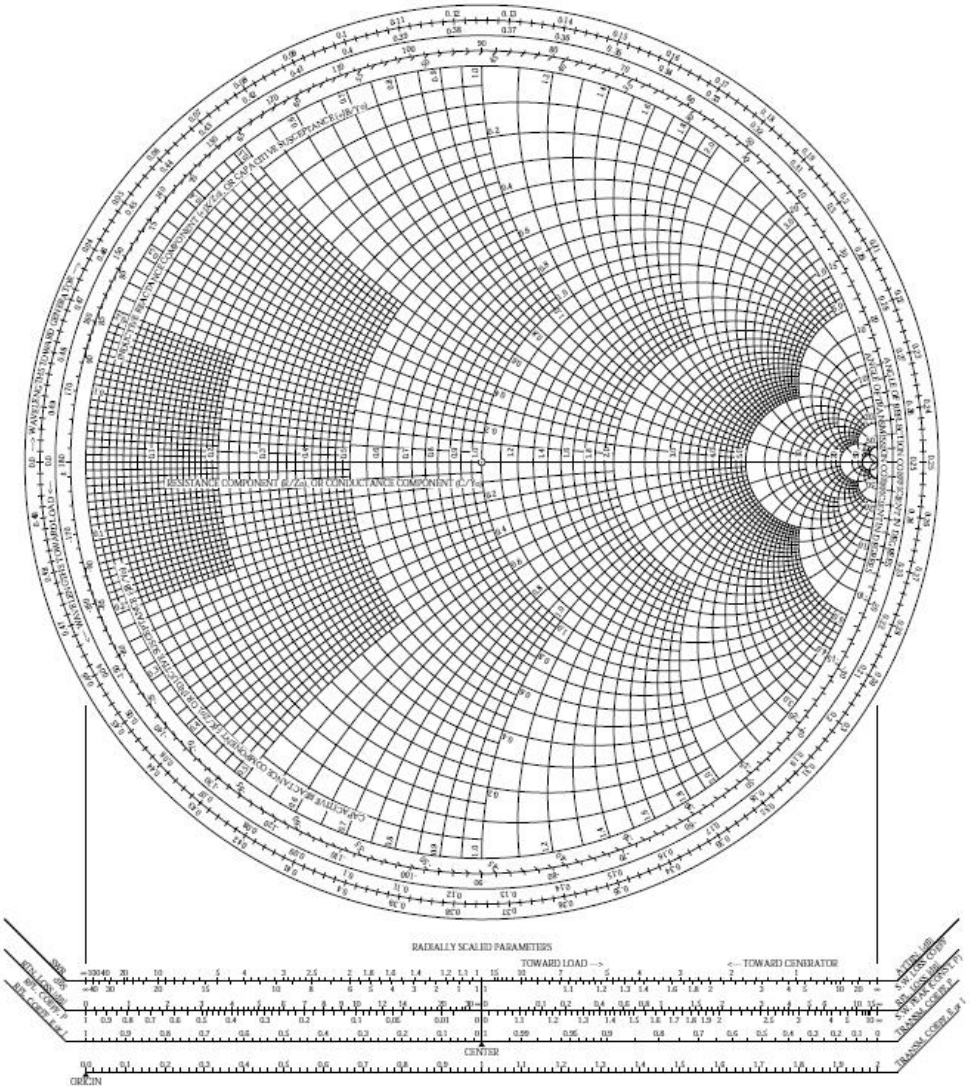

Diagrama Smith

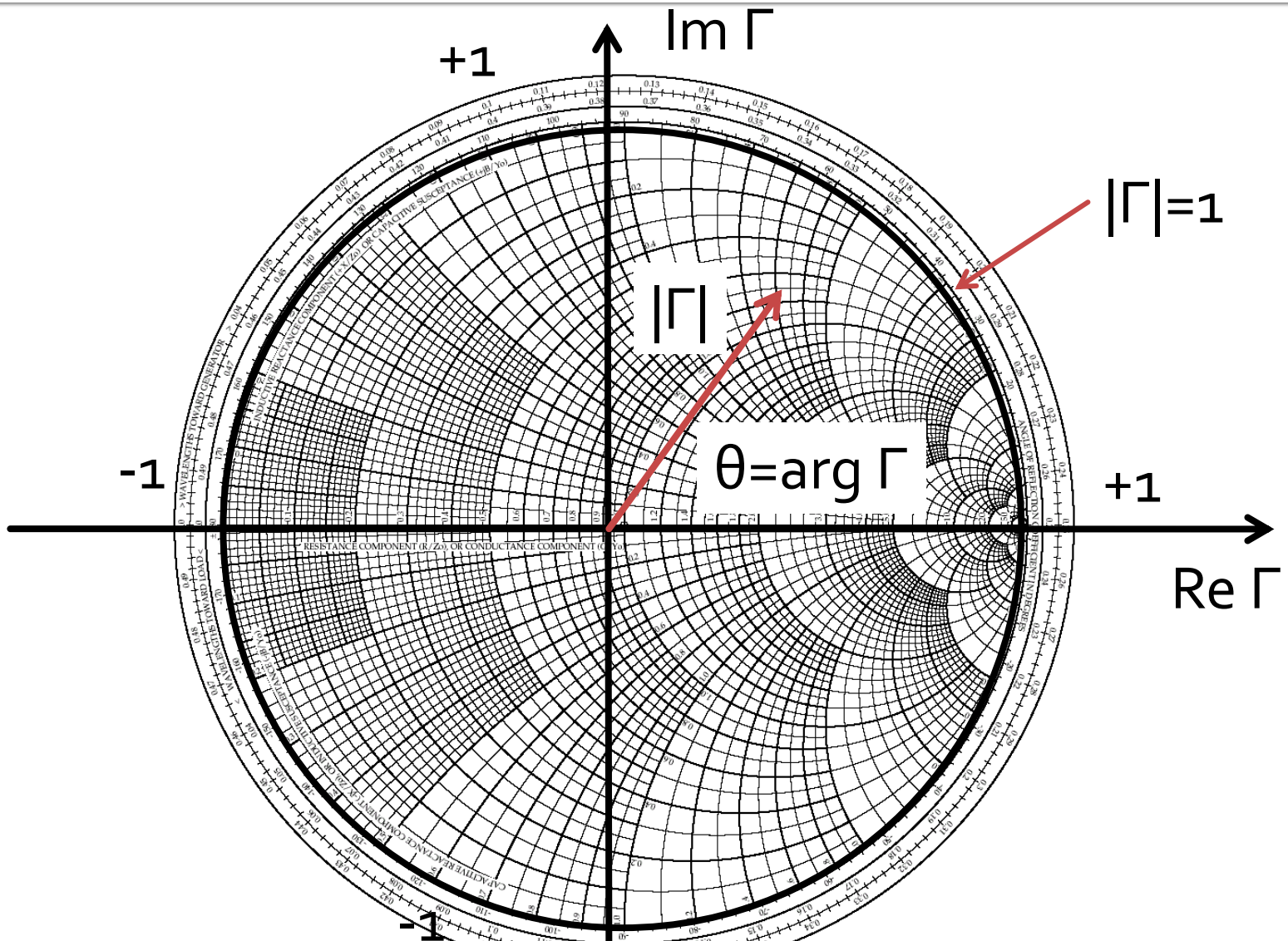

Diagrama Smith

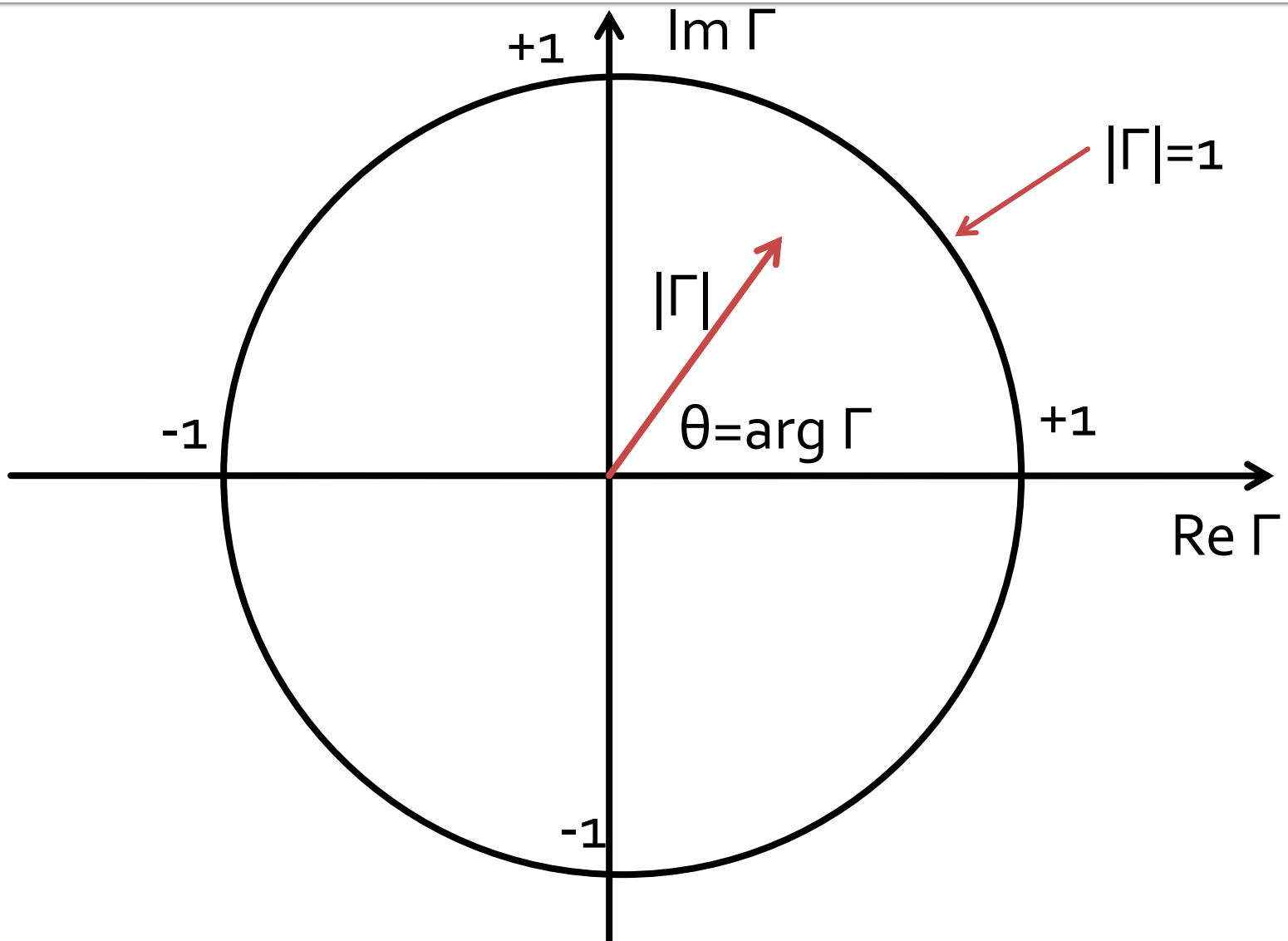

Diagrama Smith

$$\Gamma = \frac{Z_L - Z_0}{Z_L + Z_0} = \frac{z_L - 1}{z_L + 1}$$

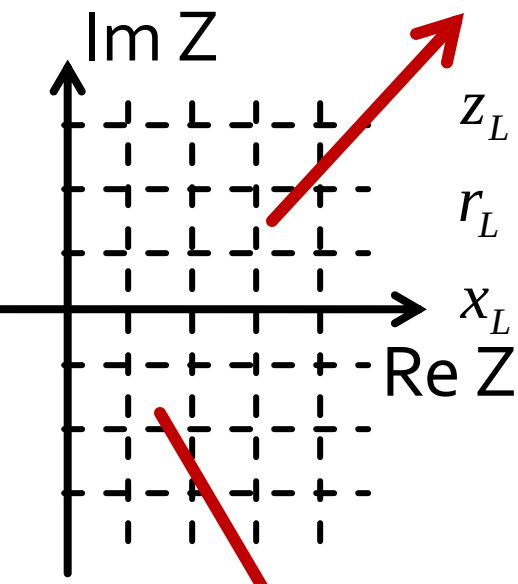

$$z_L = r_L + j \cdot x_L$$

$$r_L = ct.$$

$$x_L = ct.$$

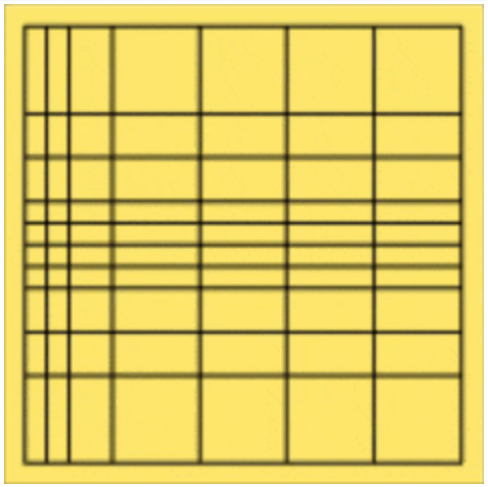

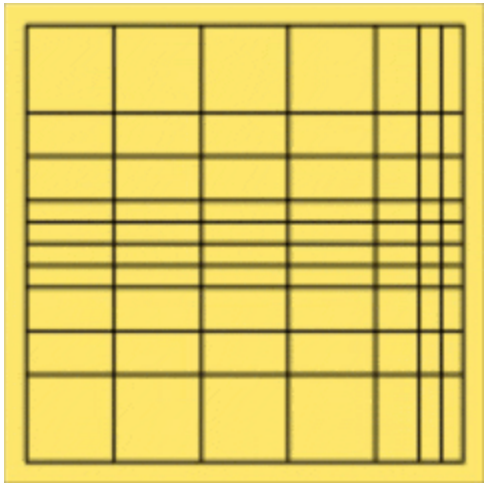

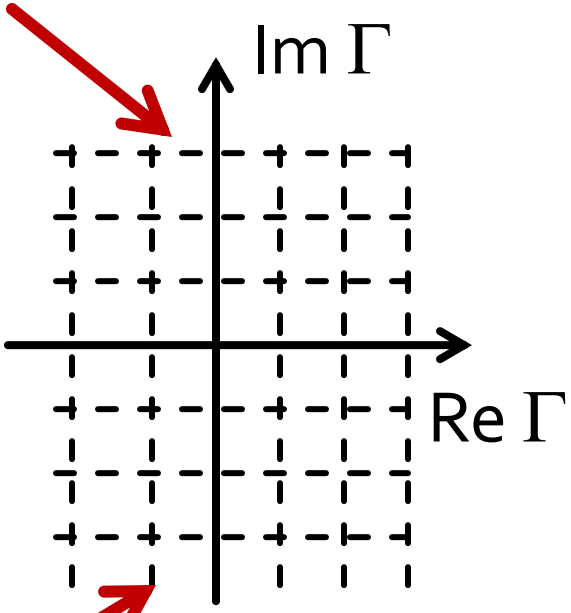

$$\Gamma = \frac{Z_L - Z_0}{Z_L + Z_0} = \frac{Y_0 - Y_L}{Y_0 + Y_L} = \frac{1 - y_L}{1 + y_L}$$

Echivalenta coeficient de reflexie ⇔impedanta

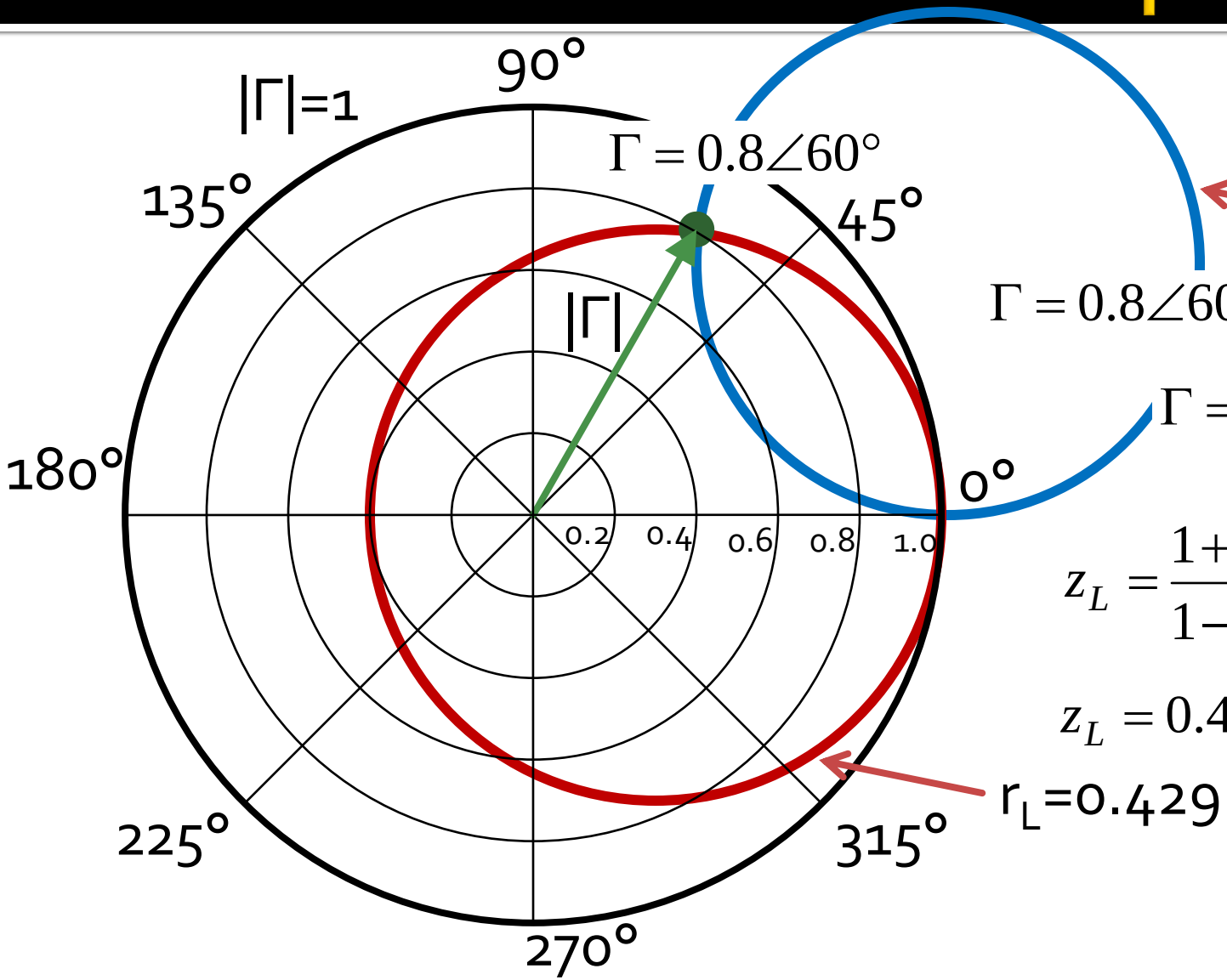

$$\Gamma = 0.8\angle 60° = 0.4 + j \cdot 0.693$$

$$\Gamma = \frac{Z_L - Z_0}{Z_L + Z_0} = \frac{z_L - 1}{z_L + 1}$$

$$z_L = \frac{1+\Gamma}{1-\Gamma} = \frac{1+0.8\angle 60°}{1-0.8\angle 60°}$$

$$z_L = 0.429 + j \cdot 1.65$$

(oricare Z_0)

Diagrama Smith, coeficient de reflexie ⇔ admitanta

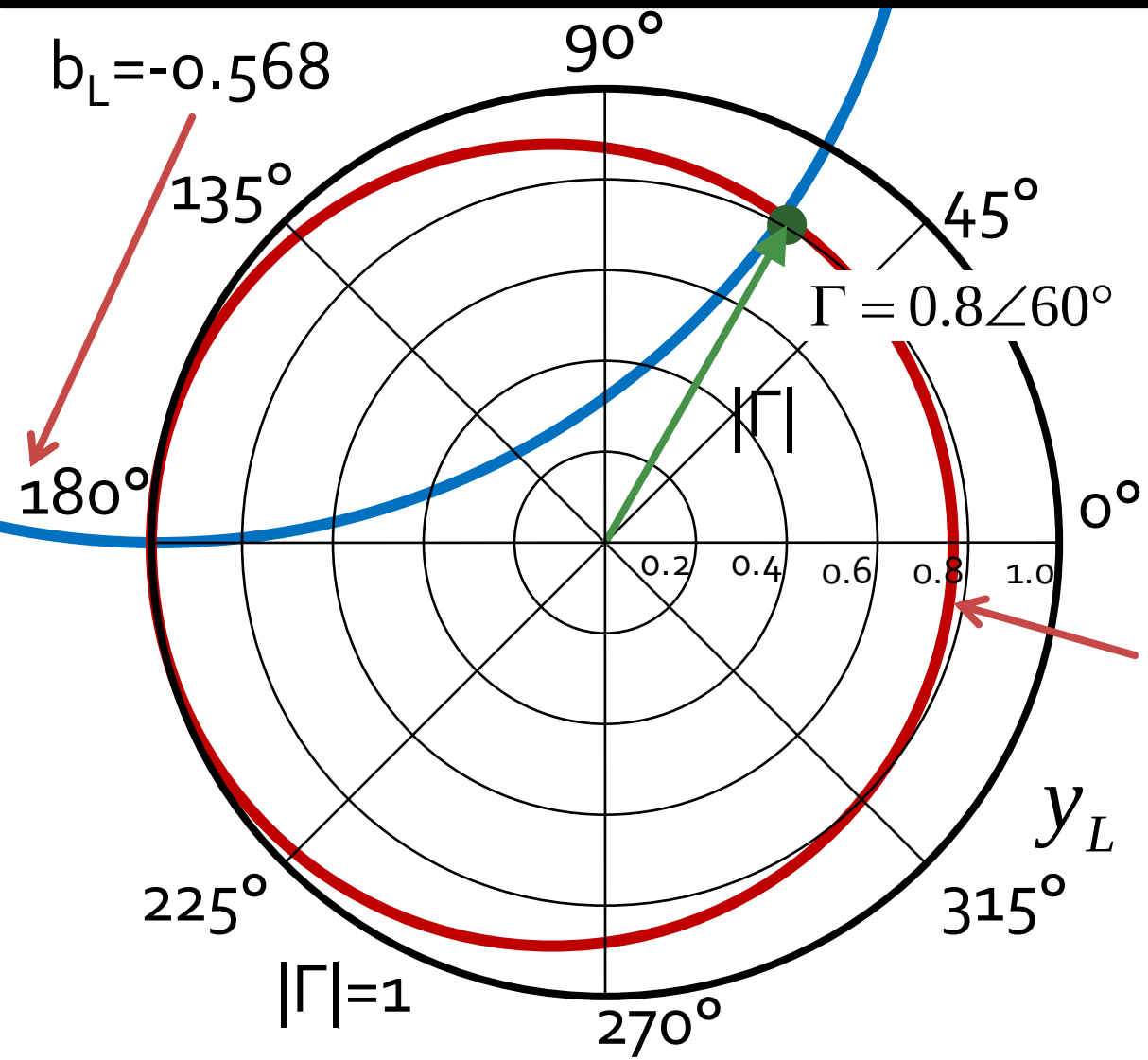

$$\Gamma = 0.8\angle 60°$$

$$Z_L = 21.429\Omega + j\cdot 82.479\Omega$$

$$z_L = 0.429 + j\cdot 1.65$$

$$y_L = \frac{1}{z_L} = 0.148 - j\cdot 0.568$$

$$y_L = 0.148 - j\cdot 0.568$$

(oricare Z_o)

Adaptarea de impedanța

Adaptarea cu elemente concentrate (Retele in L)

Cuprins

- Linii de transmisie
- Adaptarea de impedanța
- Cuploare direcționale
- Divizoare de putere
- Amplificatoare de microunde
- Filtre de microunde
- Oscilatoare de microunde ?

Diagrama Smith, adaptare

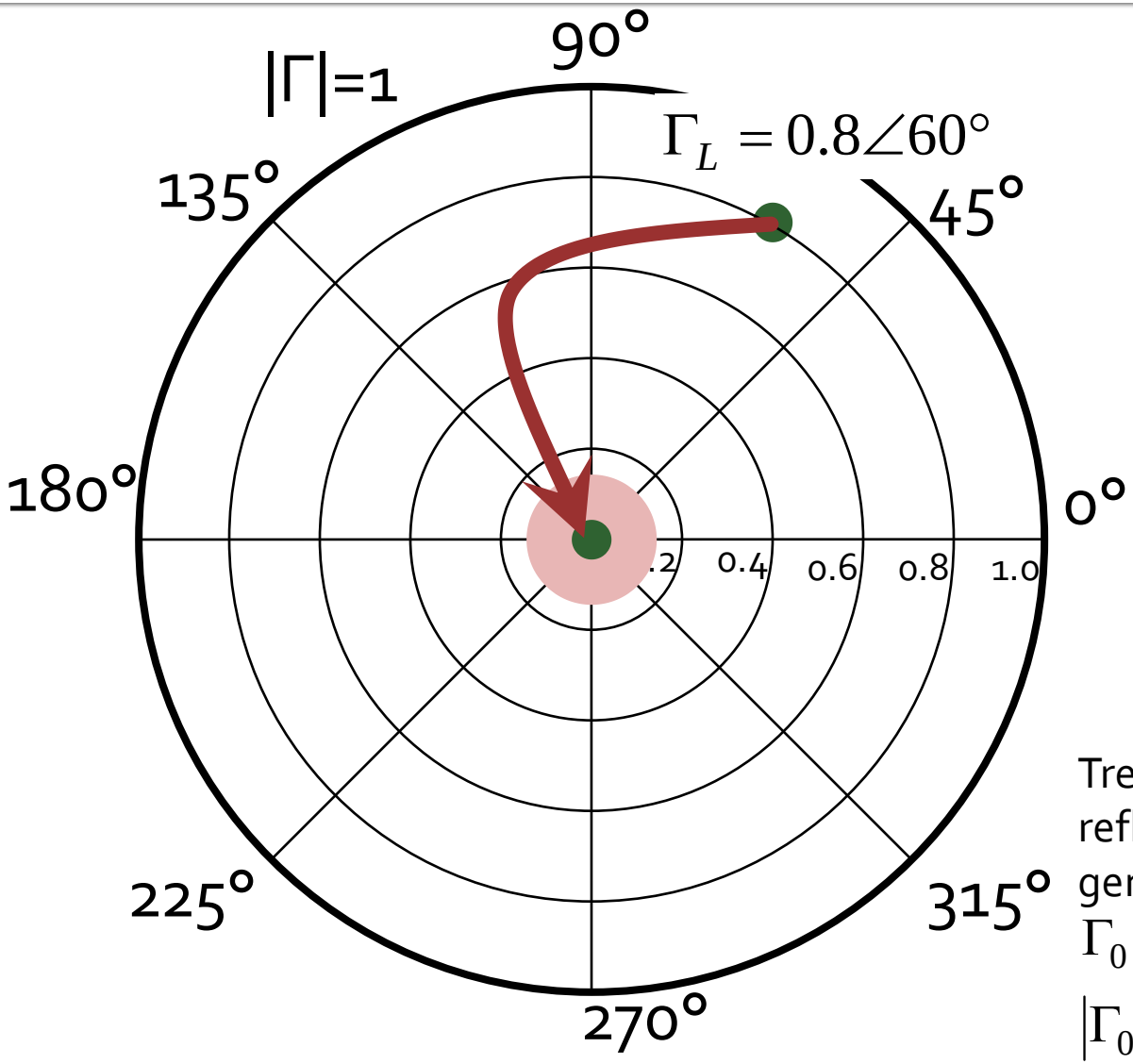

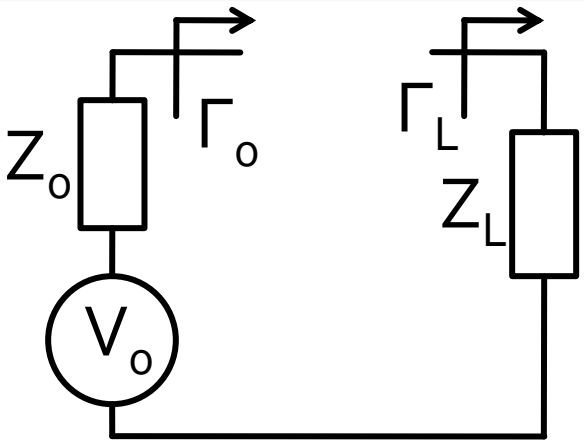

Adaptare Z_L la Z_0. Se raporteaza Z_L la Z_0

$$Z_L = 21.429\Omega + j \cdot 82.479\Omega$$

$$z_L = 0.429 + j \cdot 1.65$$

$$\Gamma_L = 0.8\angle 60°$$

Trebuie sa deplasez coeficientul de reflexie in zona in care pentru generator cu Z_0 am:

$\Gamma_0 = 0$ adaptare perfecta

$|\Gamma_0| \le \Gamma_m$ adaptare "suficienta"

Diagrama Smith, coeficient de reflexie, reactanta in serie

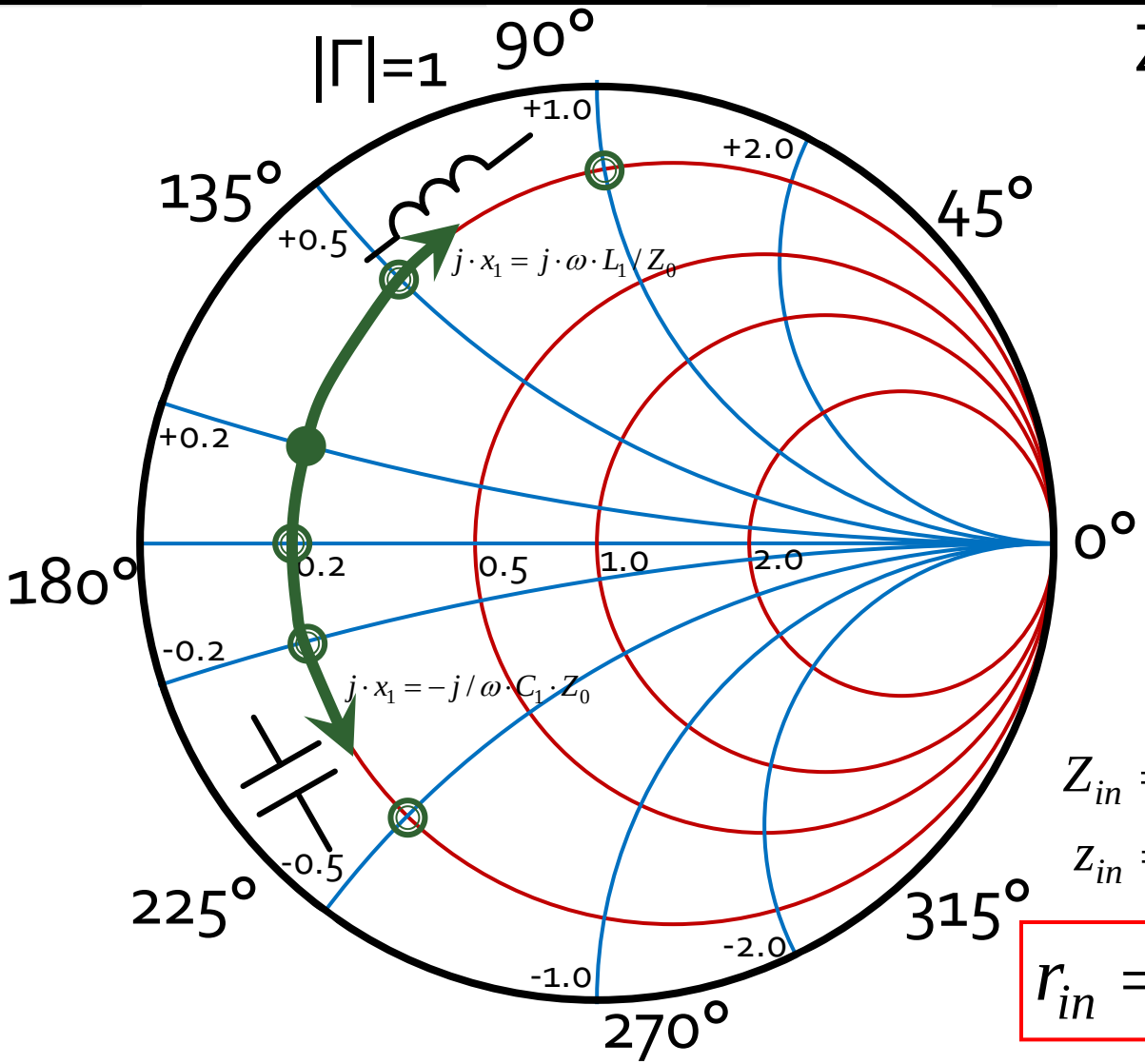

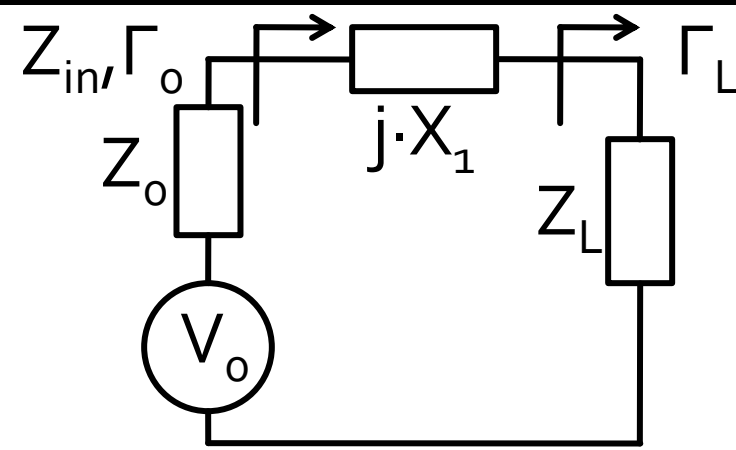

$$Z_0 = 50\Omega$$

$$Z_L = R_L + j \cdot X_L = 10\Omega + j \cdot 10$$

$$z_L = r_L + j \cdot x_L = 0.2 + j \cdot 0.2$$

$$\Gamma_L = 0.678\angle 156.5°$$

$$Z_{in} = Z_L + j \cdot X_1 = R_L + j \cdot (X_L + X_1$$

$$z_{in} = r_L + j \cdot (x_L + x_1)$$

$$\boxed{r_{in} = r_L}$$

$$j \cdot x_1 = j \cdot \omega \cdot L_1 / Z_0 > 0$$

$$j \cdot x_1 = -j / \omega \cdot C_1 \cdot Z_0 < 0$$

Diagrama Smith, coeficient de reflexie, rezistenta in serie

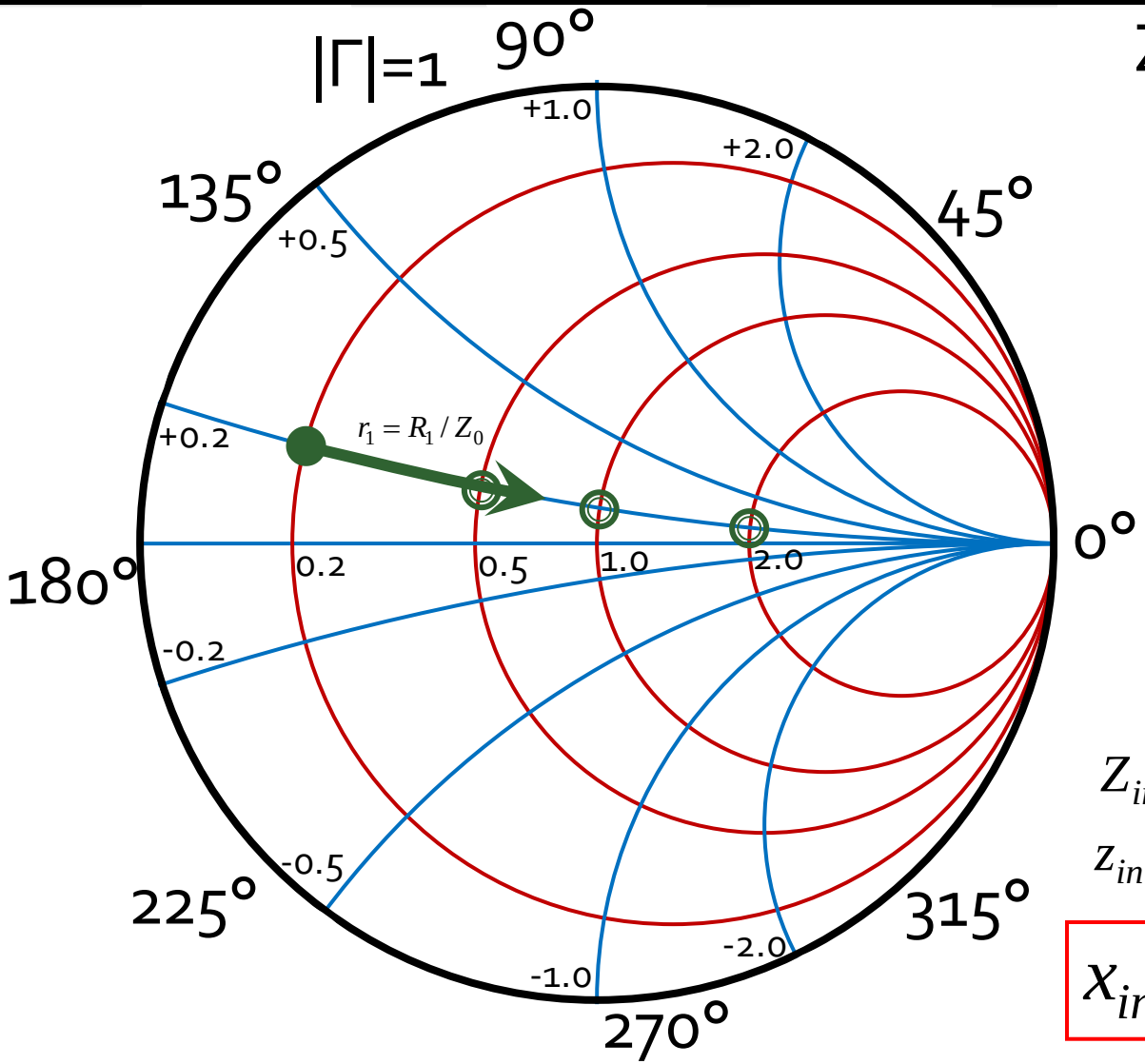

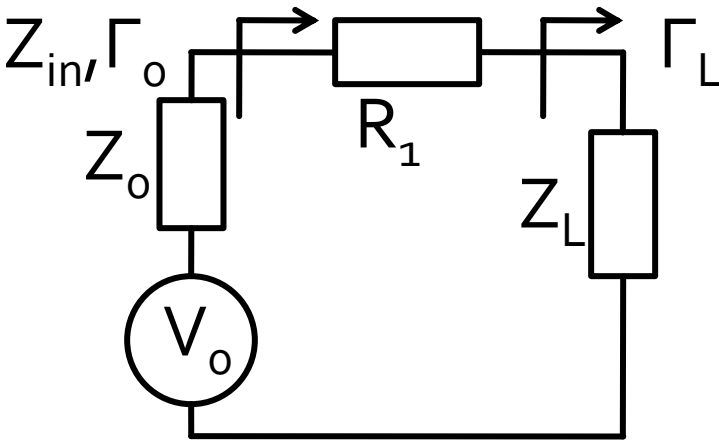

$$Z_0 = 50\Omega$$

$$Z_L = R_L + j \cdot X_L = 10\Omega + j \cdot 10$$

$$z_L = r_L + j \cdot x_L = 0.2 + j \cdot 0.2$$

$$\Gamma_L = 0.678\angle 156.5°$$

$$Z_{in} = Z_L + R_1 = (R_L + R_1) + j \cdot X_L$$

$$z_{in} = z_L + r_1 = (r_L + r_1) + j \cdot x_L$$

$$\boxed{x_{in} = x_L} \qquad r_{in} = r_L + R_1 / Z_0$$

Diagrama Smith, coeficient de reflexie, linie de transmisie in serie

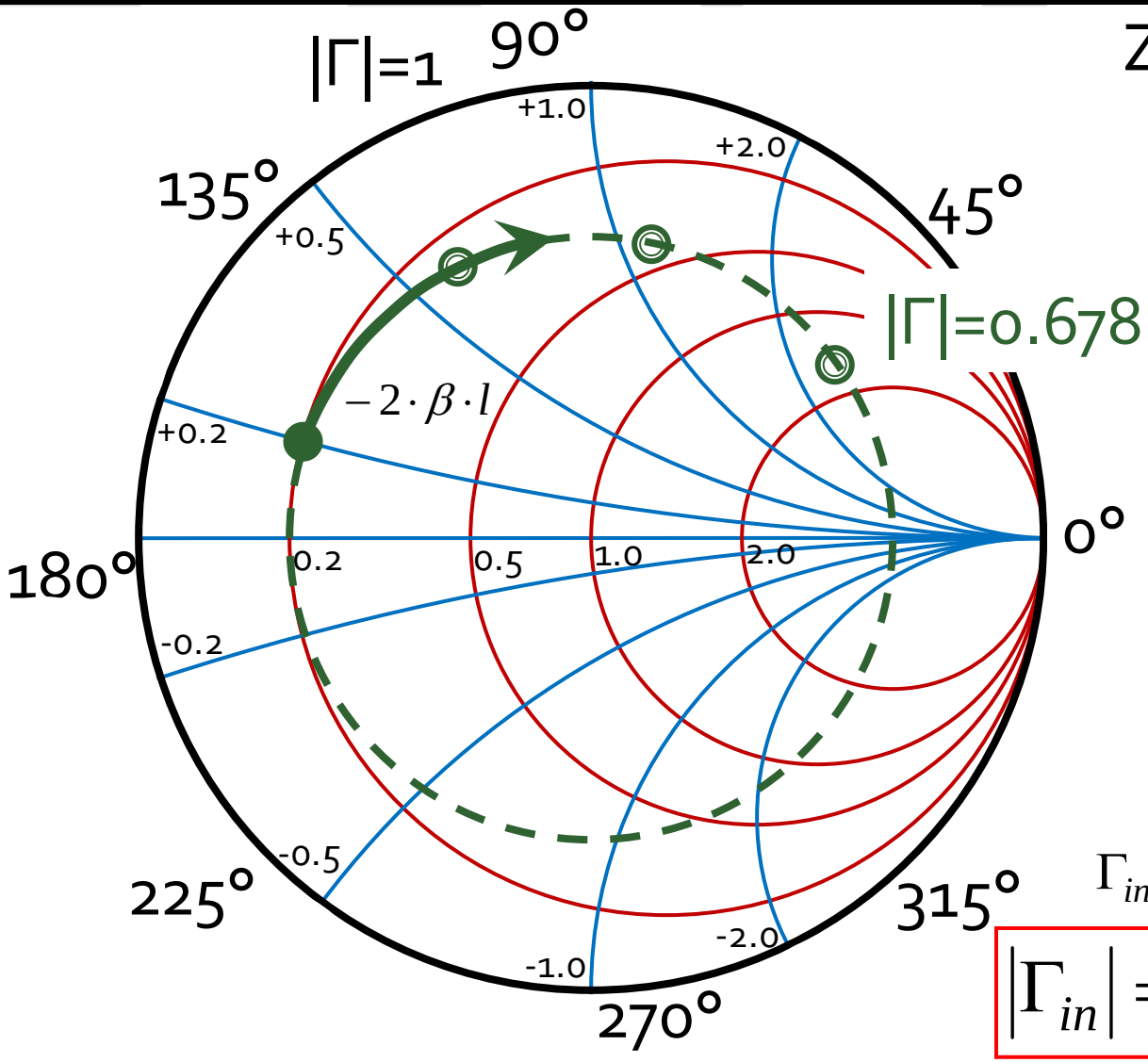

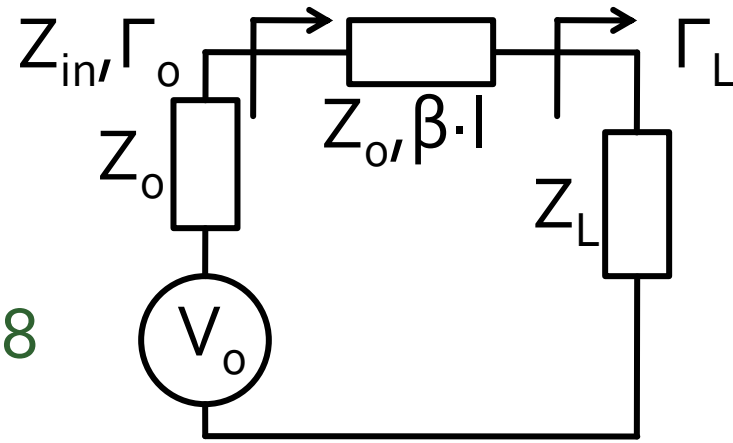

$$Z_0 = 50\Omega$$

$$Z_L = R_L + j\cdot X_L = 10\Omega + j\cdot 10$$

$$z_L = r_L + j\cdot x_L = 0.2 + j\cdot 0.2$$

$$\Gamma_L = 0.678\angle 156.5°$$

$$Z_{in} = Z_0 \cdot \frac{1+\Gamma_L\cdot e^{-2j\cdot\beta\cdot l}}{1-\Gamma_L\cdot e^{-2j\cdot\beta\cdot l}}$$

$$\Gamma_{in} = \Gamma_L \cdot e^{-2j\cdot\beta\cdot l}$$

$$\boxed{\left|\Gamma_{in}\right| = \left|\Gamma_L\right|}$$

$$\arg(\Gamma_{in}) = \arg(\Gamma_L) - 2\cdot\beta\cdot$$

Diagrama Smith, coeficient de reflexie, susceptanta in paralel

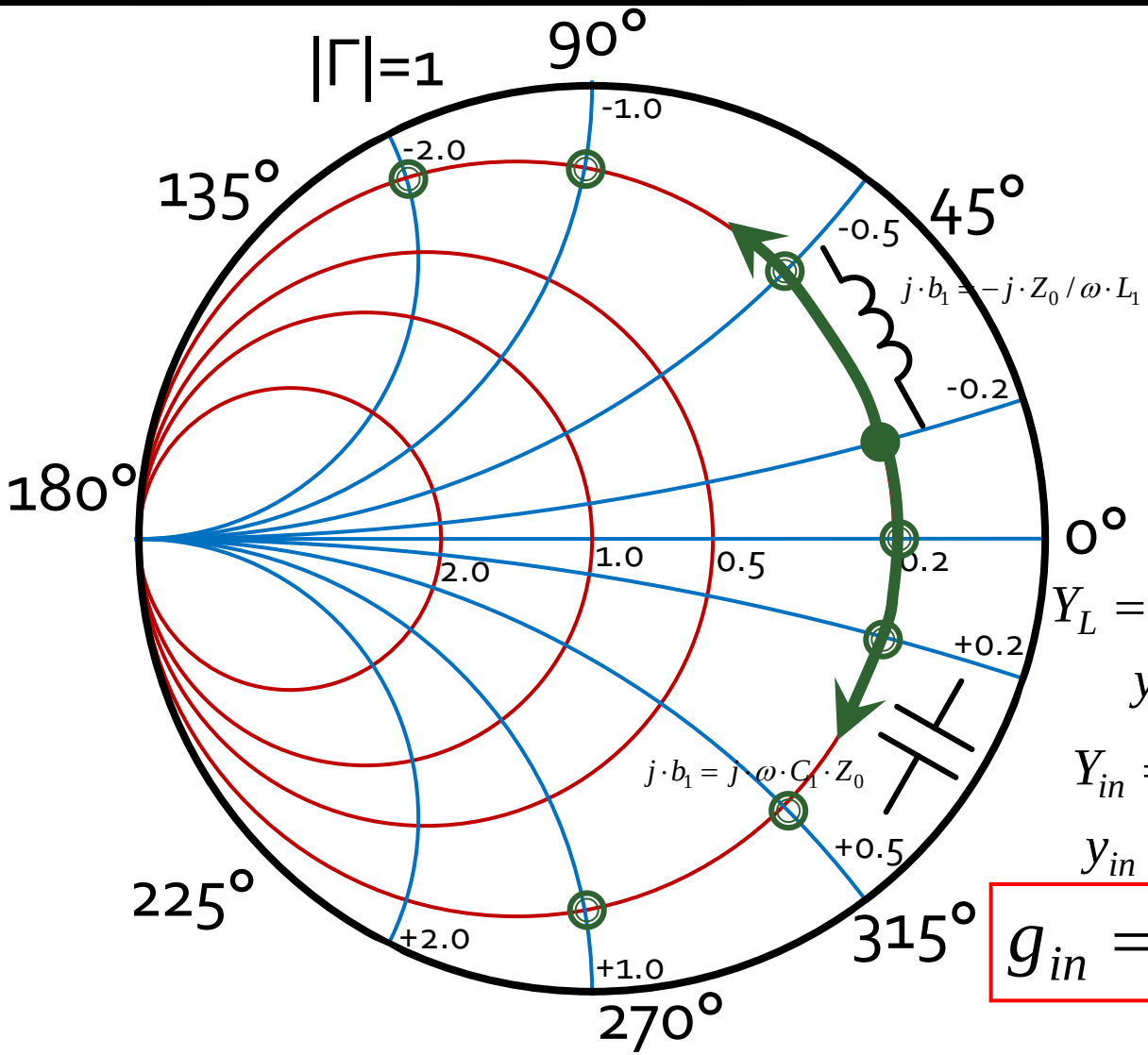

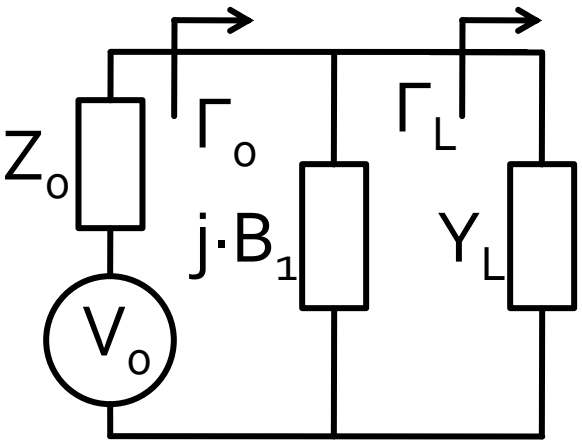

$$Z_0 = 50\Omega, Y_0 = 0.02S$$

$$\Gamma_L = 0.678\angle 23.5°$$

$$Y_L = G_L + j \cdot B_L = 0.004S + j \cdot 0.004$$

$$y_L = g_L + j \cdot b_L = 0.2 - j \cdot 0.2$$

$$Y_{in} = Y_L + j \cdot B_1 = G_L + j \cdot (B_L + B_1)$$

$$y_{in} = g_L + j \cdot (b_L + b_1)$$

$$\boxed{g_{in} = g_L}$$

$$j \cdot b_1 = j \cdot \omega \cdot C_1 \cdot Z_0 > 0$$

$$j \cdot b_1 = -j \cdot Z_0 / \omega \cdot L_1 < 0$$

Diagrama Smith, coeficient de reflexie, conductanta in paralel

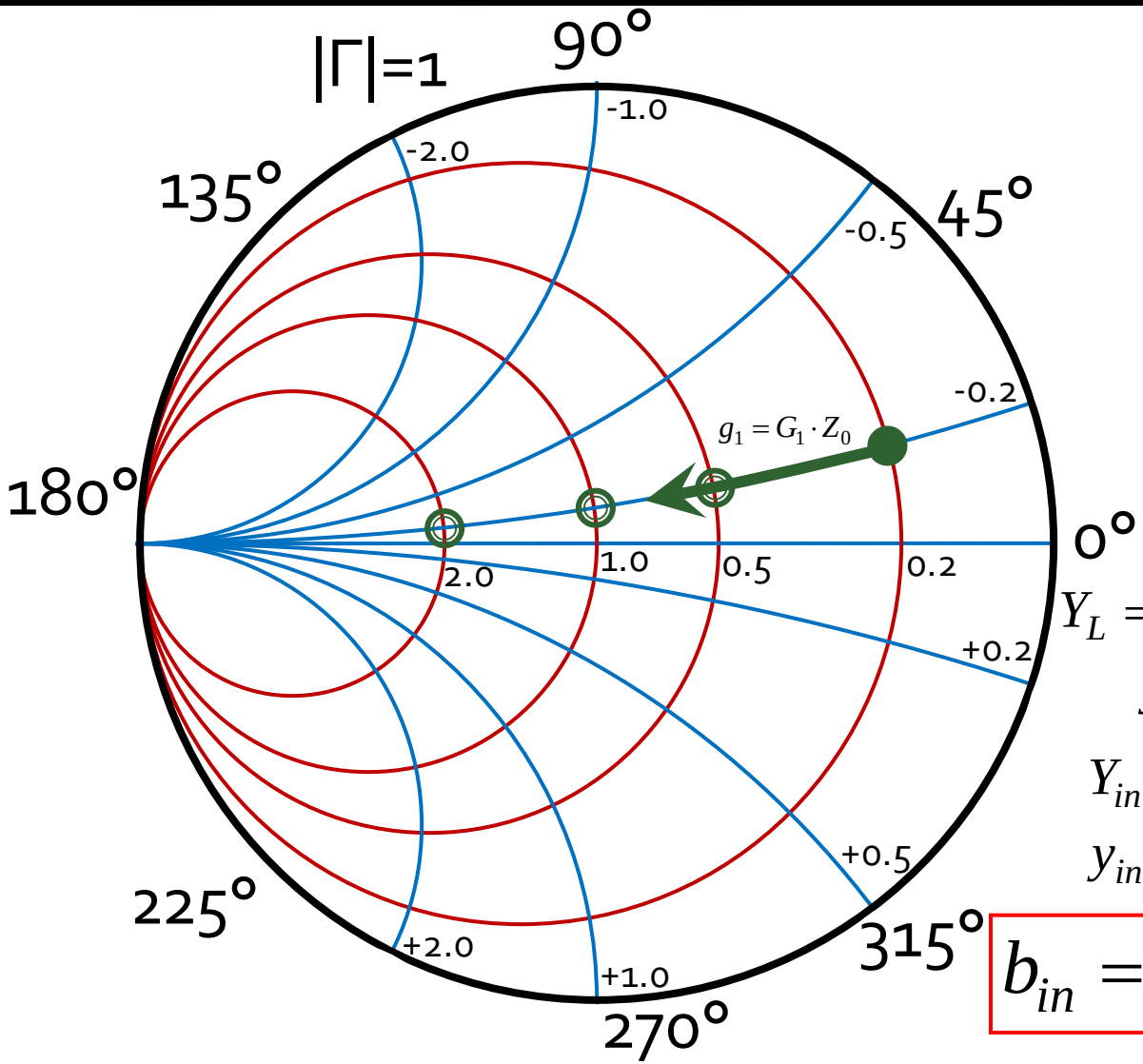

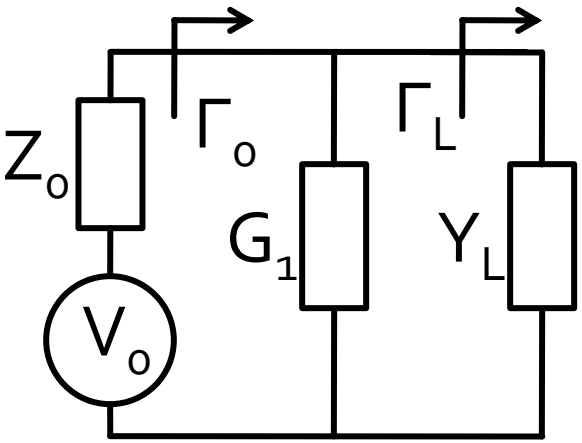

$$Z_0 = 50\Omega, Y_0 = 0.02S$$

$$\Gamma_L = 0.678\angle 23.5°$$

$$Y_L = G_L + j \cdot B_L = 0.004S + j \cdot 0.004$$

$$y_L = g_L + j \cdot b_L = 0.2 - j \cdot 0.2$$

$$Y_{in} = Y_L + G_1 = (G_L + G_1) + j \cdot B_L$$

$$y_{in} = (g_L + g_1) + j \cdot b_L$$

$$\boxed{b_{in} = b_L}$$

$$g_{in} = g_L + G_1 \cdot Z_0$$

Adaptare de impedanța

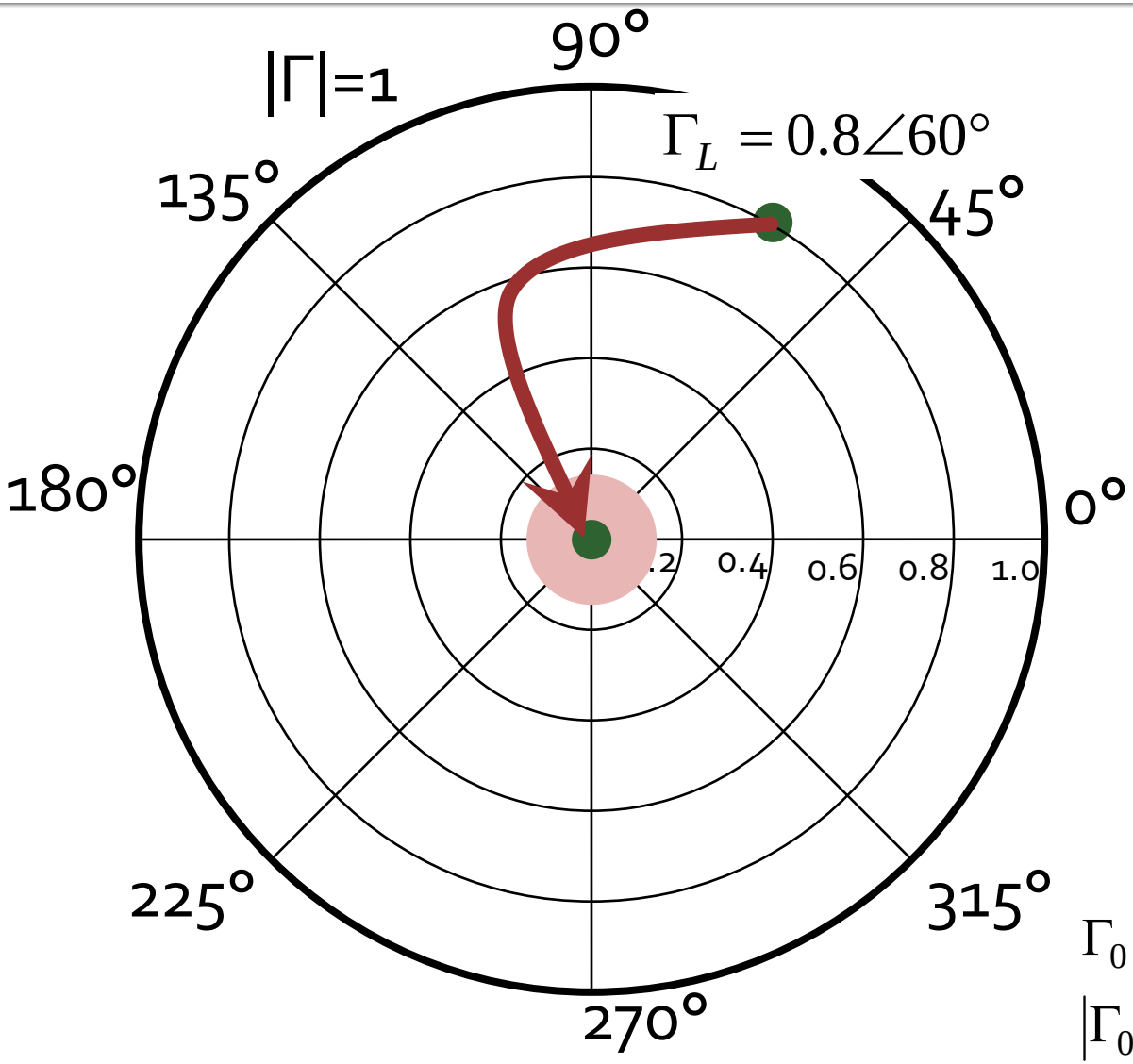

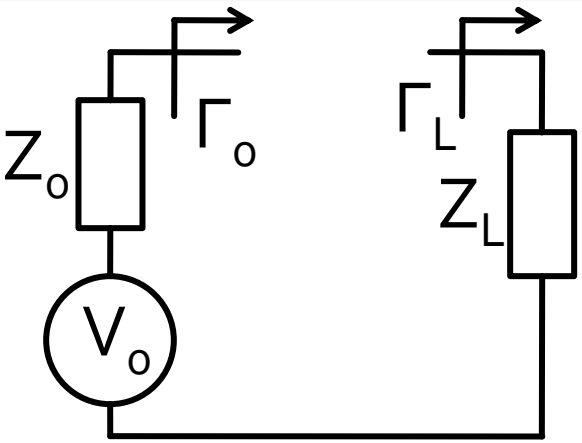

Cum?

$\Gamma_0 = 0$ adaptare perfecta

$|\Gamma_0| \le \Gamma_m$ adaptare "suficienta"

Adaptare, reactanta in serie

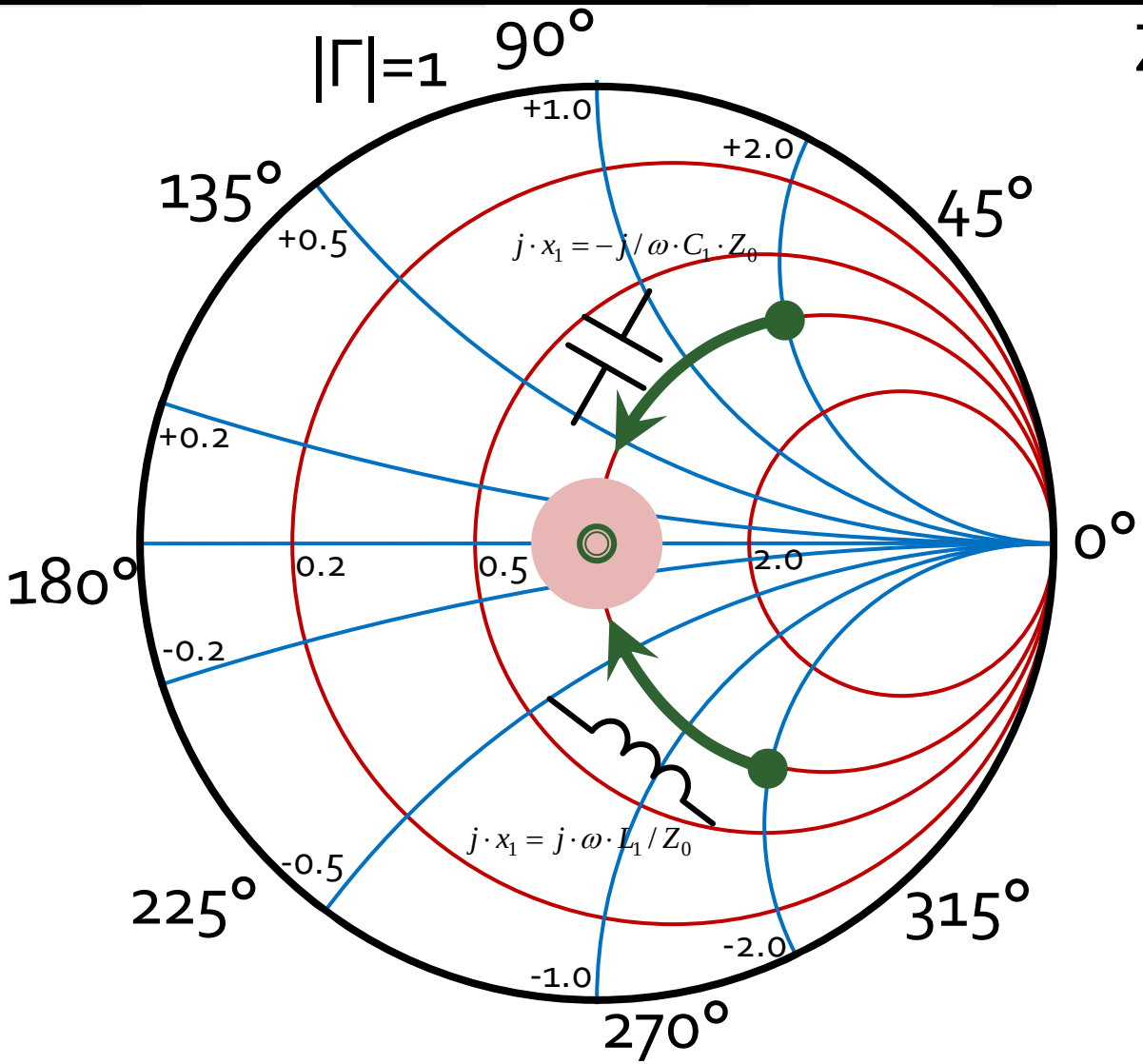

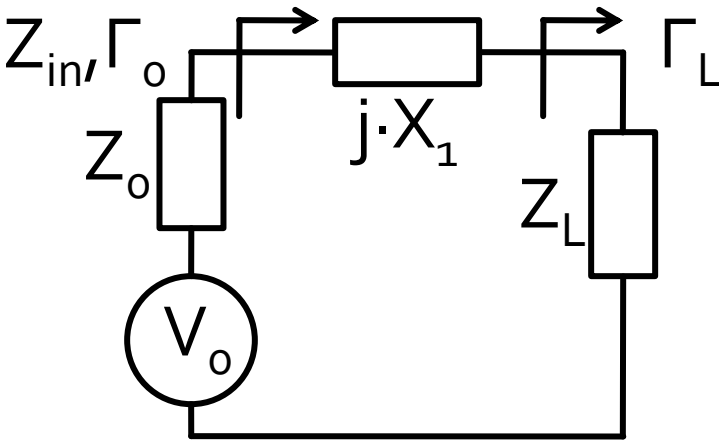

$$z_L = r_L + j \cdot x_L$$

$$z_{in} = r_L + j \cdot (x_L + x_1)$$

$$\boxed{r_{in} = r_L}$$

- Adaptarea se poate realiza **numai daca** $r_L = 1$
- se realizeaza compensarea partii reactive a sarcinii

$$j \cdot x_1 = -j \cdot x_L$$

Adaptare, susceptanta in paralel

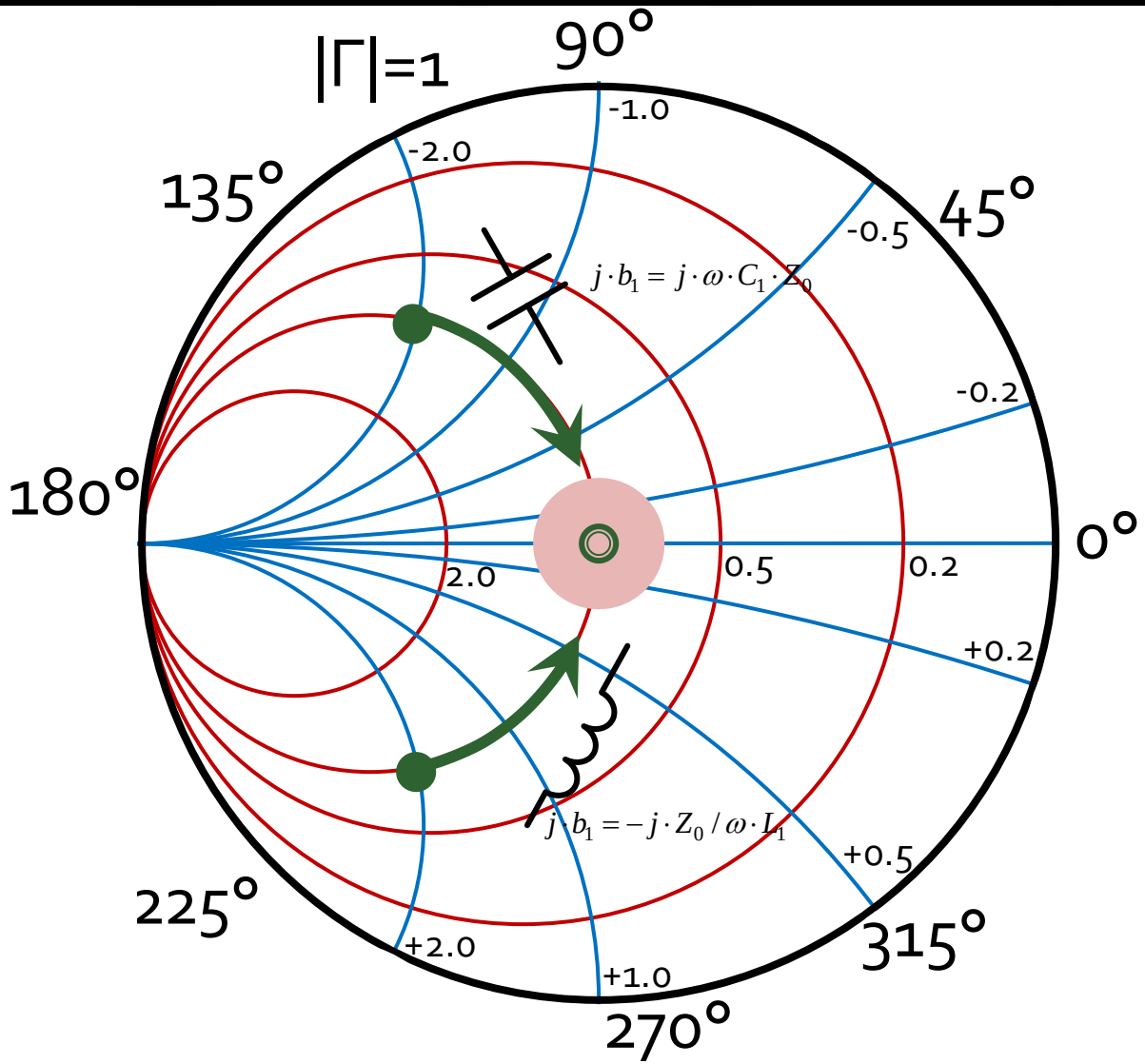

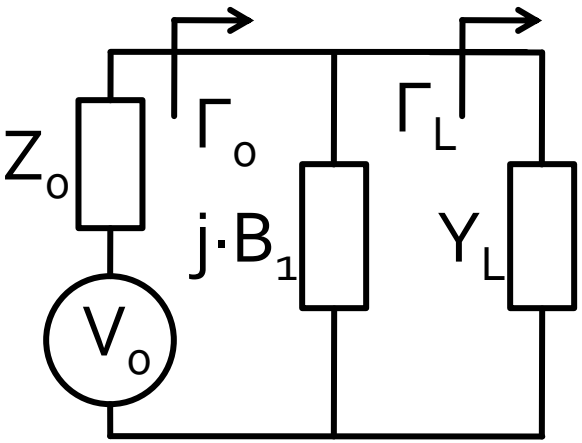

$$y_L = g_L + j \cdot b_L$$

$$y_{in} = g_L + j \cdot (b_L + b_1)$$

$$\boxed{g_{in} = g_L}$$

- Adaptarea se poate realiza **numai daca** $g_L = 1$
- se realizeaza compensarea partii reactive a sarcinii

$$j \cdot b_1 = -j \cdot b_L$$

Diagrama Smith, r=1 si g=1

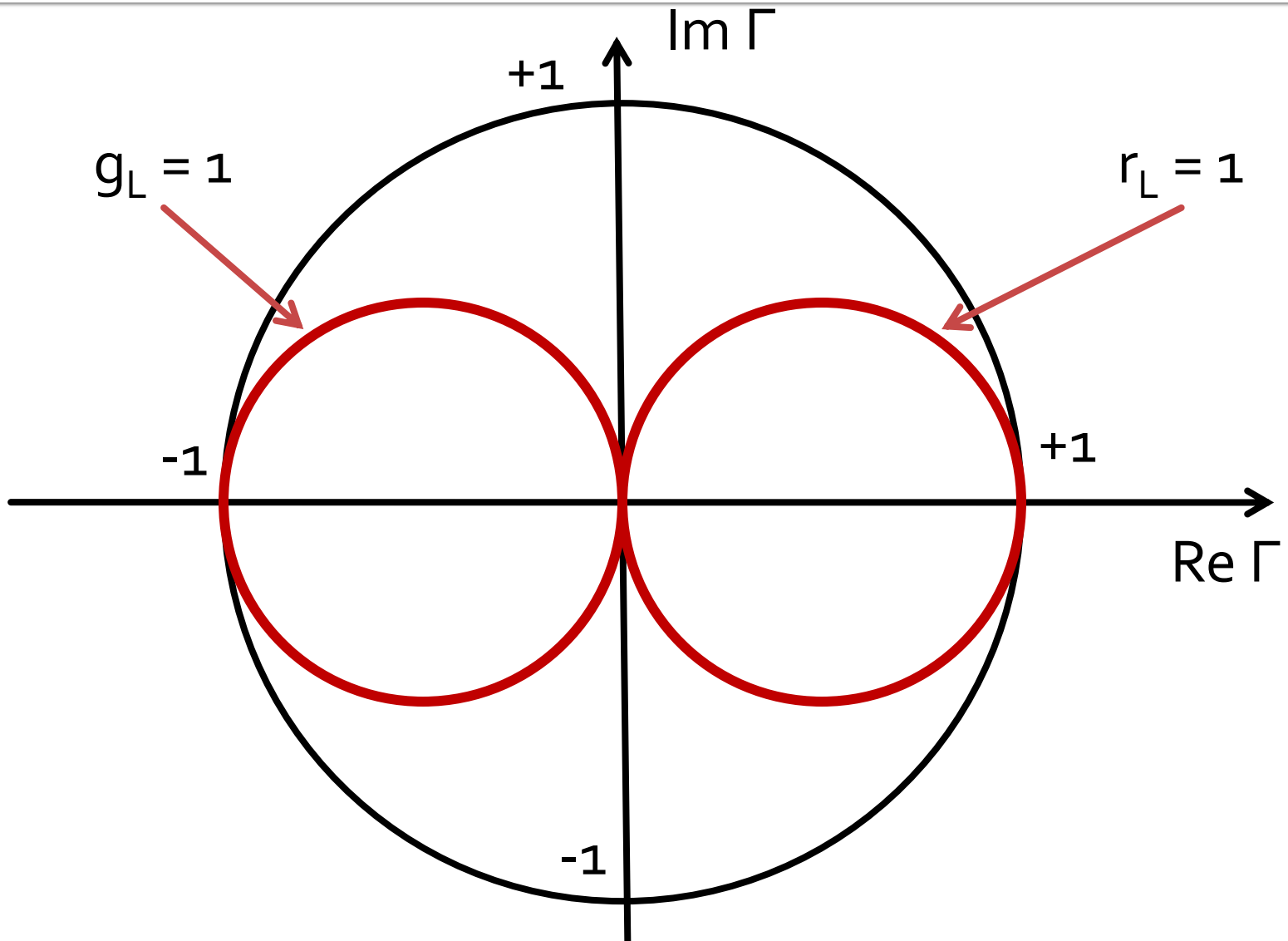

Adaptare cu doua elemente reactive (retele in L)

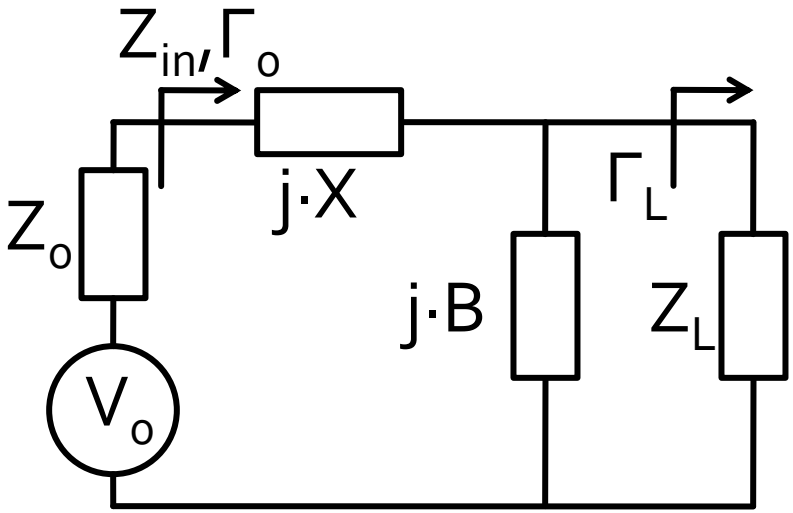

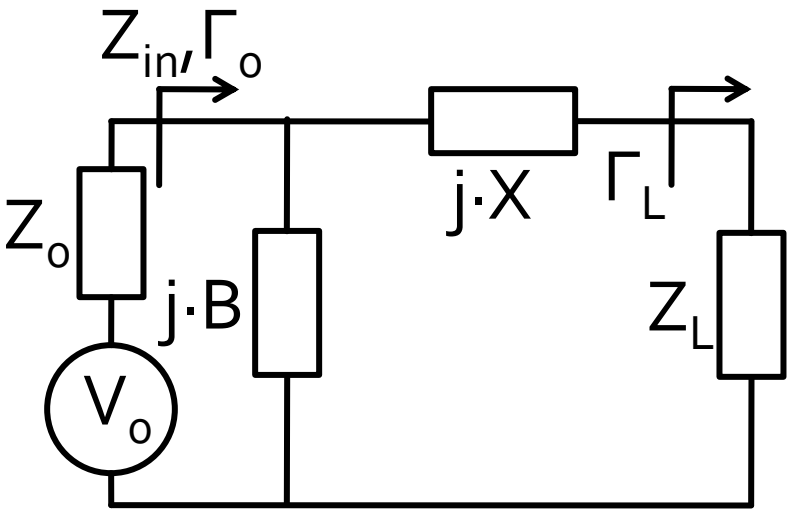

- Adaptare in **doi** pasi
  - un prim element muta coeficientul de reflexie **pe cercul** $r_L = 1/g_L = 1$
  - al doilea element realizeaza adaptarea

L serie, C paralel / C paralel, L serie

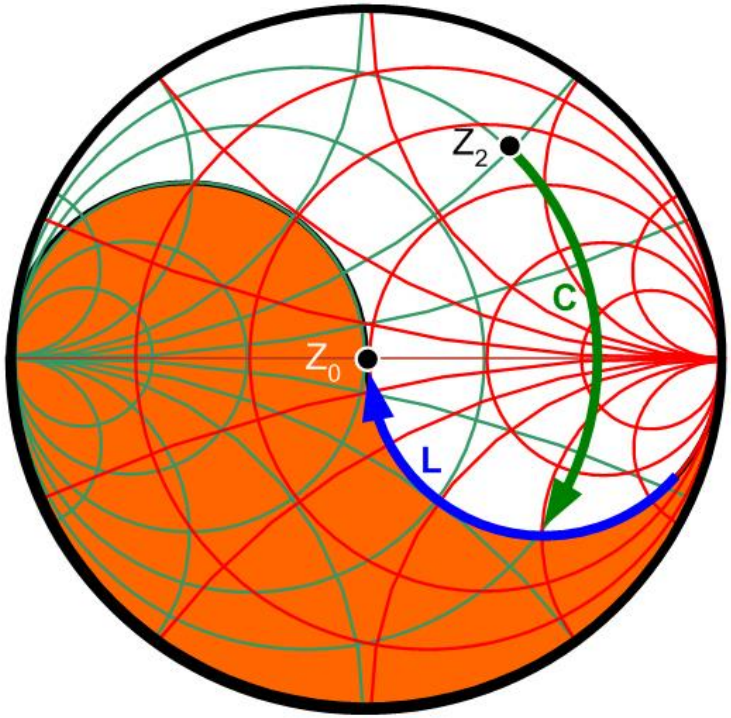

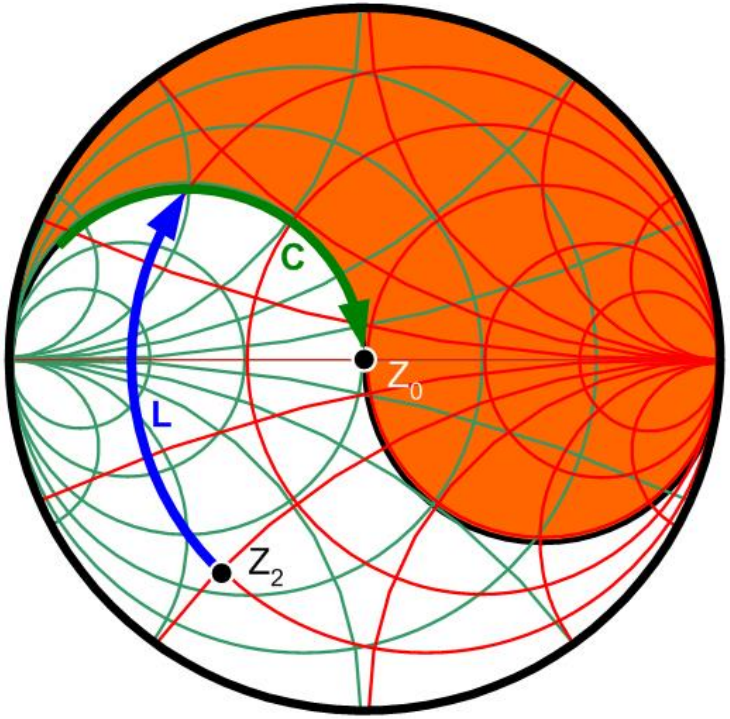

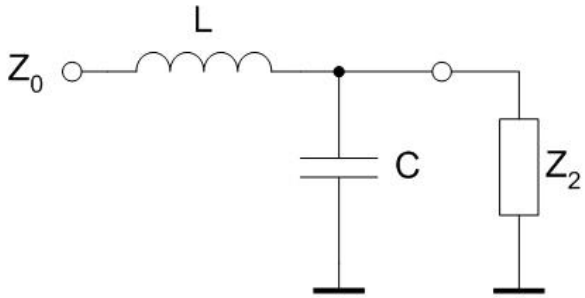

Zona interzisa cu schema curenta

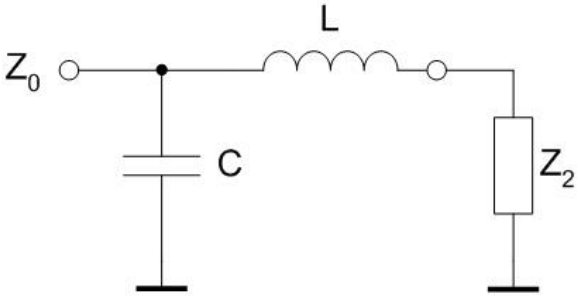

C serie, L paralel / L paralel, C serie

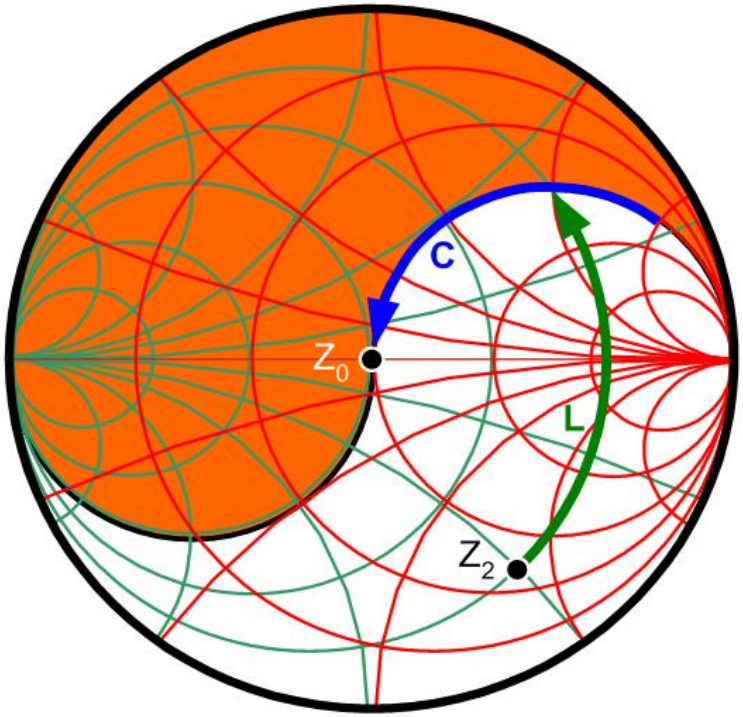

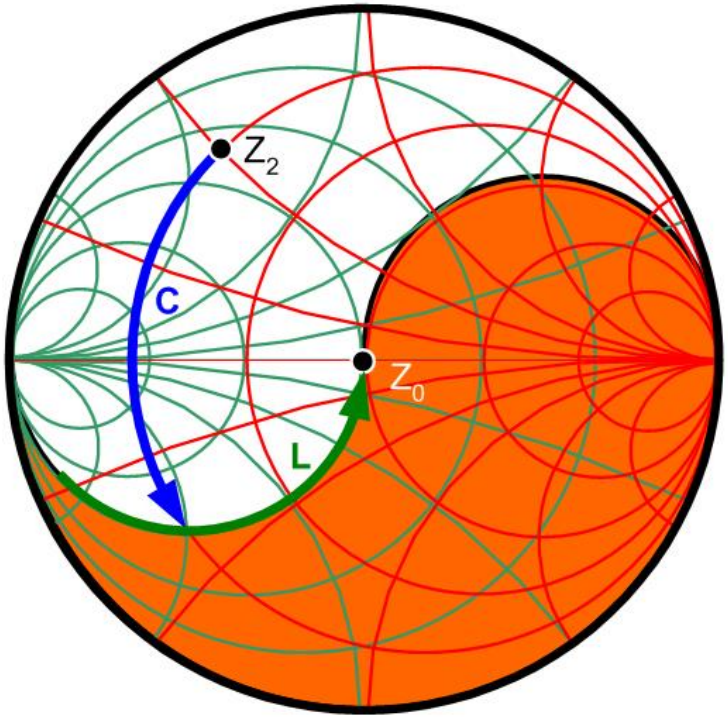

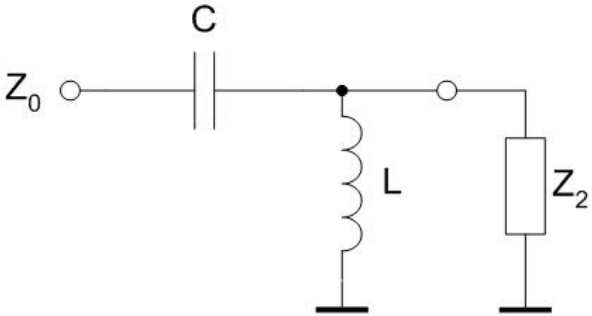

Zona interzisa cu schema curenta

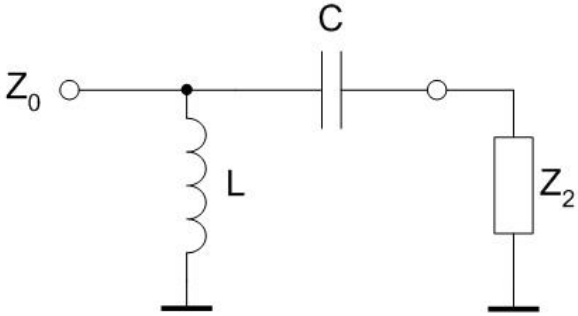

Adaptare cu doua elemente reactive (retele in L)

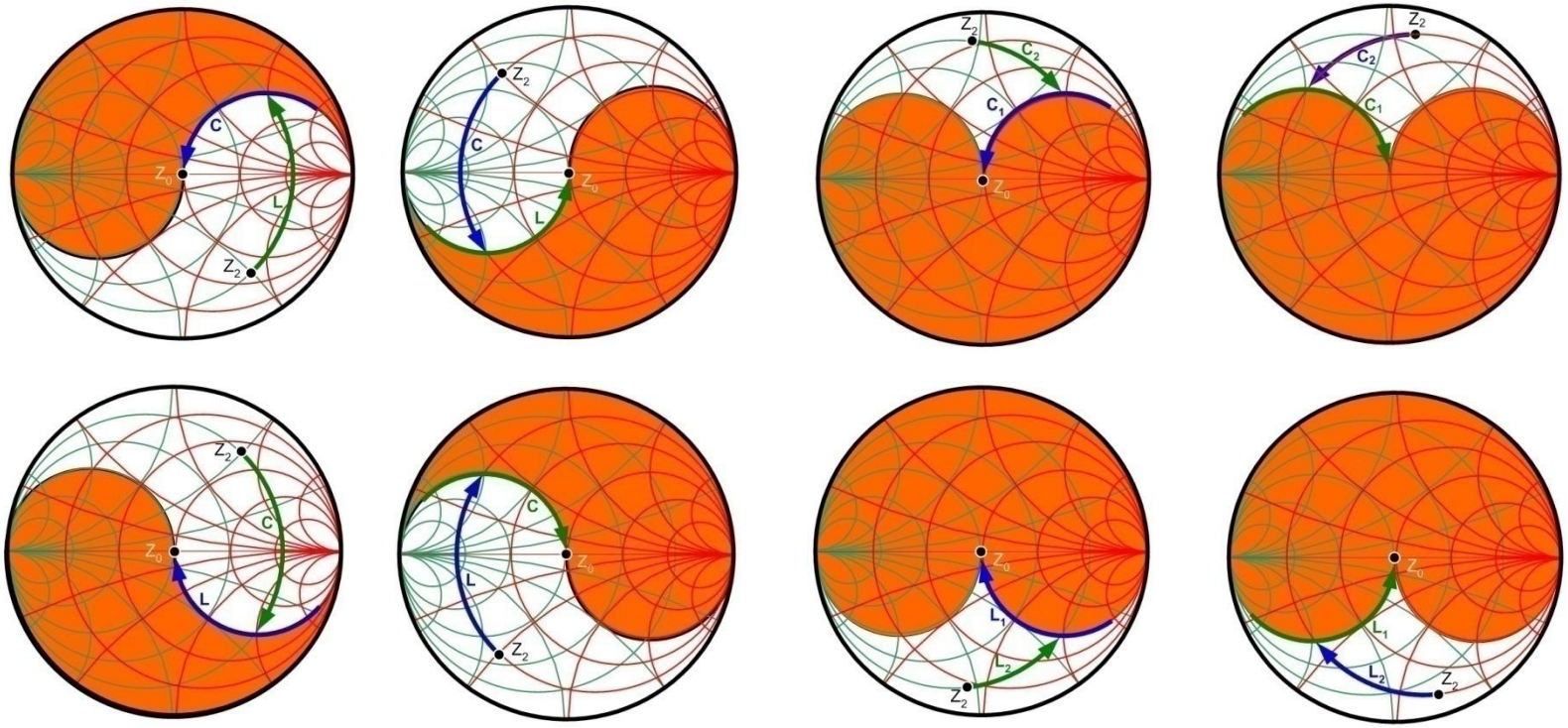

Zona interzisa cu schema curenta

Adaptare cu doua elemente reactive (retele in L)

- Pentru orice Γ_L exista **cel putin 2 retele in L** de adaptare posibile (L+C)
- Pentru **anumite** zone de start de pe diagrama Smith exista 4 posibilitati (+2 retele C+C/L+L)
- Se alege reteaua care necesita componente de valori realizabile
- Prin adaugarea elementelor rezistive se pot suplimenta retelele posibile cu **pierdere de putere (nerecomandat)**

Adaptare cu elemente rezistive

- Circuitele active lucreaza in zona frecventei unitare
- Orice "risipa" de putere este **nerecomandata**
- Exista situatii in care este **necesara** o astfel de actiune pentru asigurarea stabilitatii

Adaptare cu doua elemente reactive (retele in L)

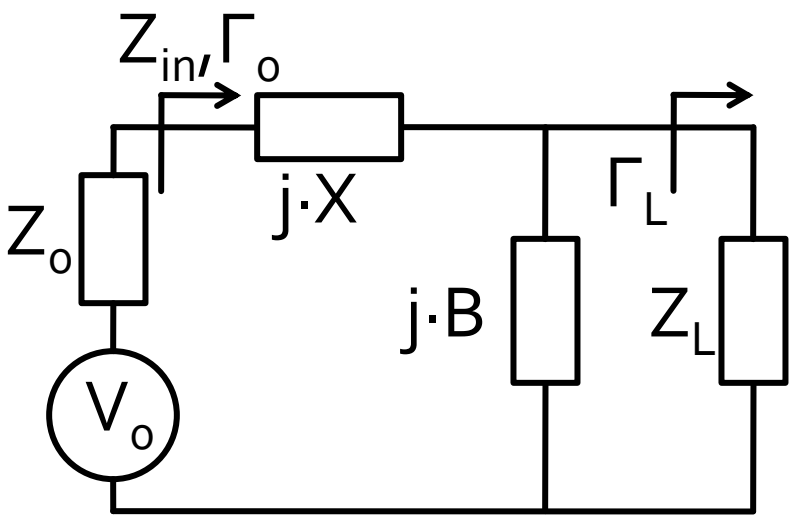

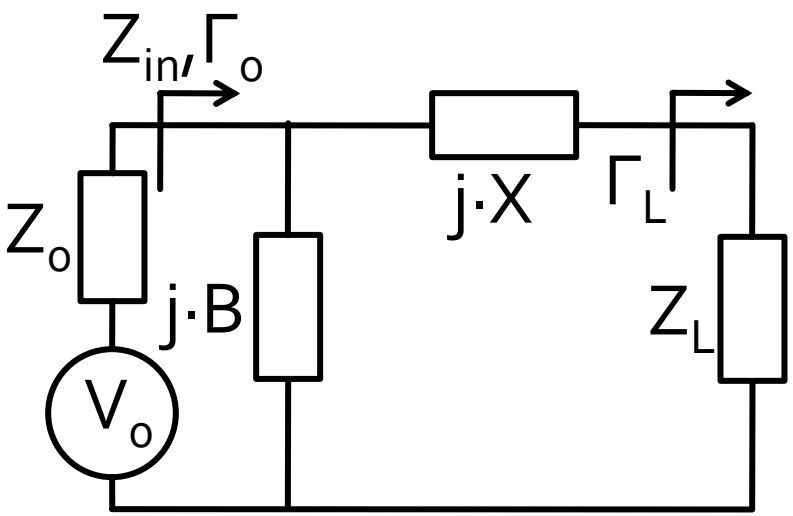

- Adaptare in doi pasi
  - pentru elementele situate in interiorul cercului $r_L = 1$ se utilizeaza prima schema
  - pentru elementele situate in exteriorul cercului $r_L = 1$ se utilizeaza a doua schema

Adaptare cu doua elemente reactive (retele in L)

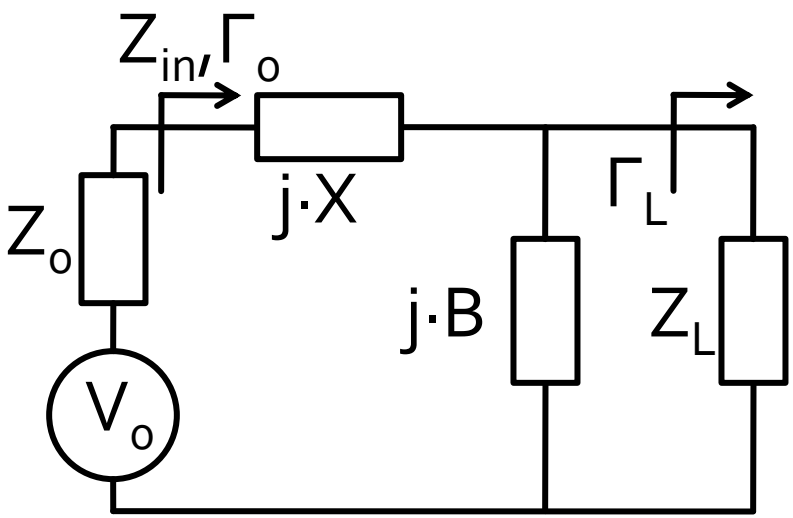

$$Z_L = R_L + j \cdot X_L \qquad R_L > Z_0 \qquad Z_{in} = Z_0$$

$$Z_0 = j \cdot X + \frac{1}{j \cdot B + 1/\left(R_L + j \cdot X_L\right)}$$

$$\begin{cases} B \cdot \left(X \cdot R_L - X_L \cdot Z_0\right) = R_L - Z_0 \\ X \cdot \left(1 - B \cdot X_L\right) = B \cdot Z_0 \cdot R_L - X_L \end{cases}$$

$$B = \frac{X_L \pm \sqrt{R_L / Z_0} \cdot \sqrt{R_L^2 + X_L^2 - Z_0 \cdot R_L}}{R_L^2 + X_L^2}$$

$$X = \frac{1}{B} + \frac{X_L \cdot Z_0}{R_L} - \frac{Z_0}{B \cdot R_L}$$

- valoarea de sub radical e intotdeauna pozitiva pentru

$$R_L > Z_0$$

- se obtin doua solutii realizabile

$$X = \begin{cases} \omega \cdot L \\ -\dfrac{1}{\omega \cdot C} \end{cases} \qquad B = \begin{cases} \omega \cdot C \\ -\dfrac{1}{\omega \cdot L} \end{cases}$$

Adaptare cu doua elemente reactive (retele in L)

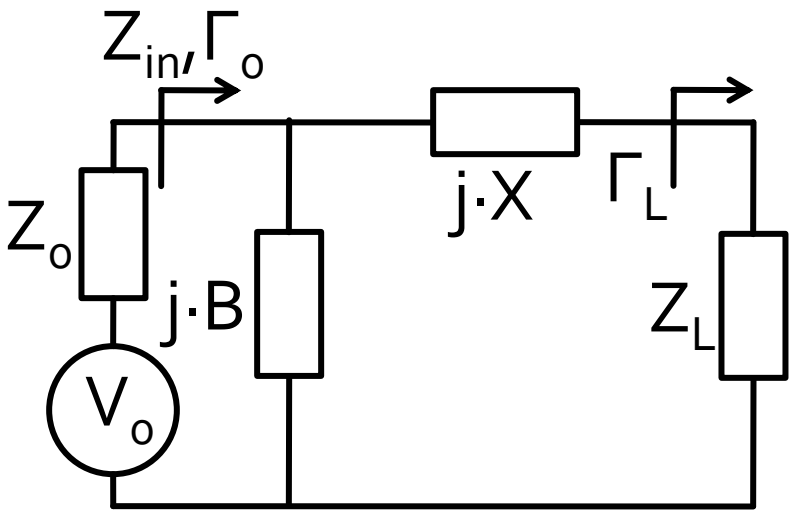

$$Z_L = R_L + j \cdot X_L \qquad R_L < Z_0 \qquad Y_{in} = Y_0 = \frac{1}{Z_0}$$

$$\frac{1}{Z_0} = j \cdot B + \frac{1}{R_L + j \cdot (X + X_L)}$$

$$\begin{cases} B \cdot Z_0 \cdot (X + X_L) = Z_0 - R_L \\ (X + X_L) = B \cdot Z_0 \cdot R_L \end{cases}$$

$$X = \pm\sqrt{R_L \cdot (Z_0 - R_L)} - X_L \qquad B = \pm\frac{\sqrt{(Z_0 - R_L)/R_L}}{Z_0}$$

- valoarea de sub radical e intotdeauna pozitiva pentru

$$R_L < Z_0$$

- se obtin doua solutii realizabile

$$X = \begin{cases} \omega \cdot L \\ -\dfrac{1}{\omega \cdot C} \end{cases} \qquad B = \begin{cases} \omega \cdot C \\ -\dfrac{1}{\omega \cdot L} \end{cases}$$

Exemplu

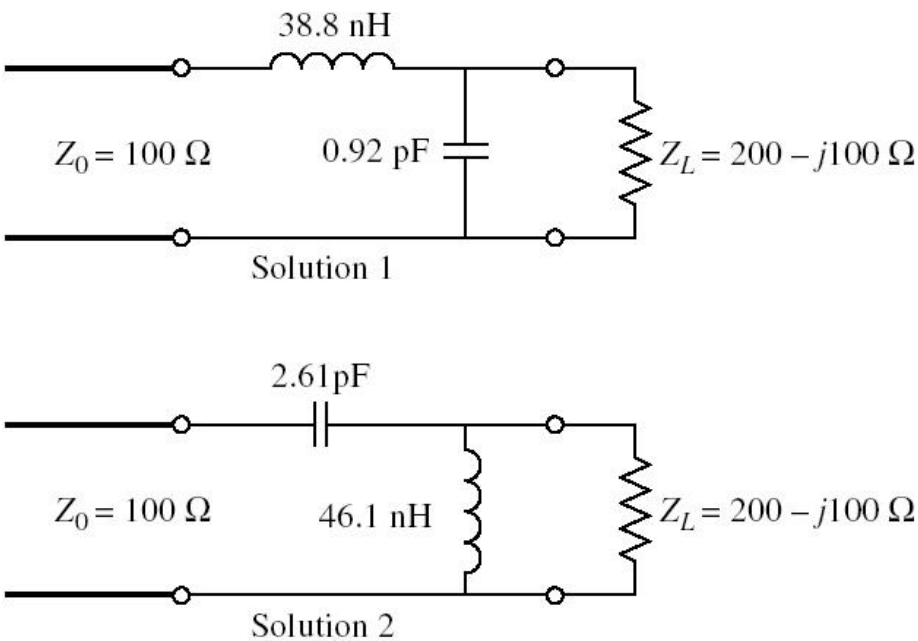
38.8 nH
$Z_0 = 100\ \Omega$
0.92 pF
$Z_L = 200 - j100\ \Omega$
Solution 1
2.61pF
$Z_0 = 100\ \Omega$
46.1 nH
$Z_L = 200 - j100\ \Omega$
Solution 2

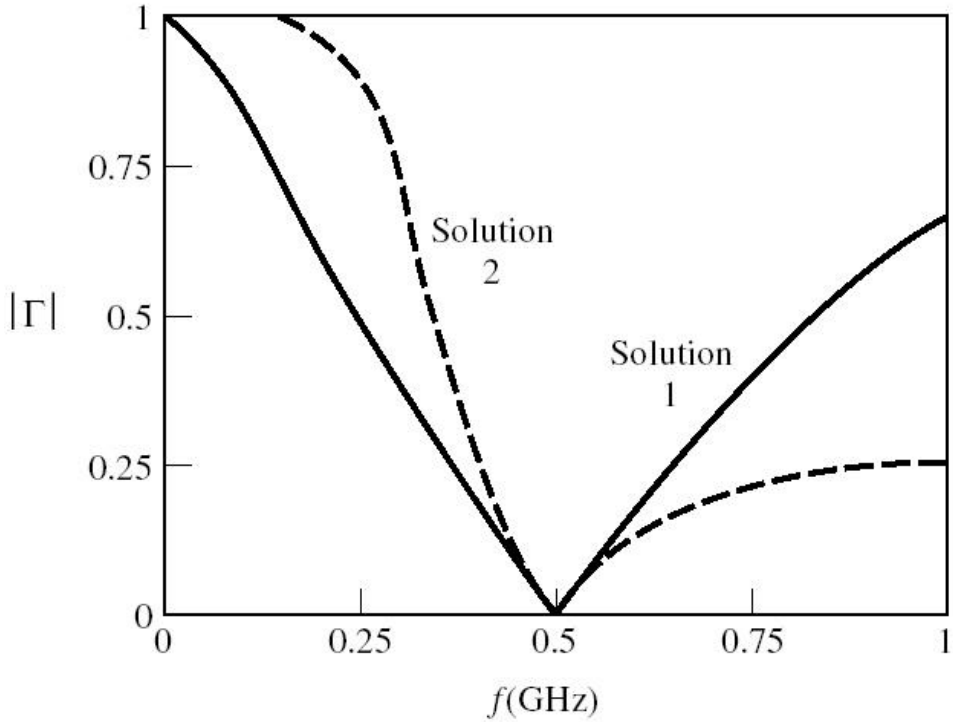
1
0.75
0.5
0.25
0
$|\Gamma|$
Solution 2
Solution 1
0
0.25
0.5
0.75
1
f(GHz)

Exemplu

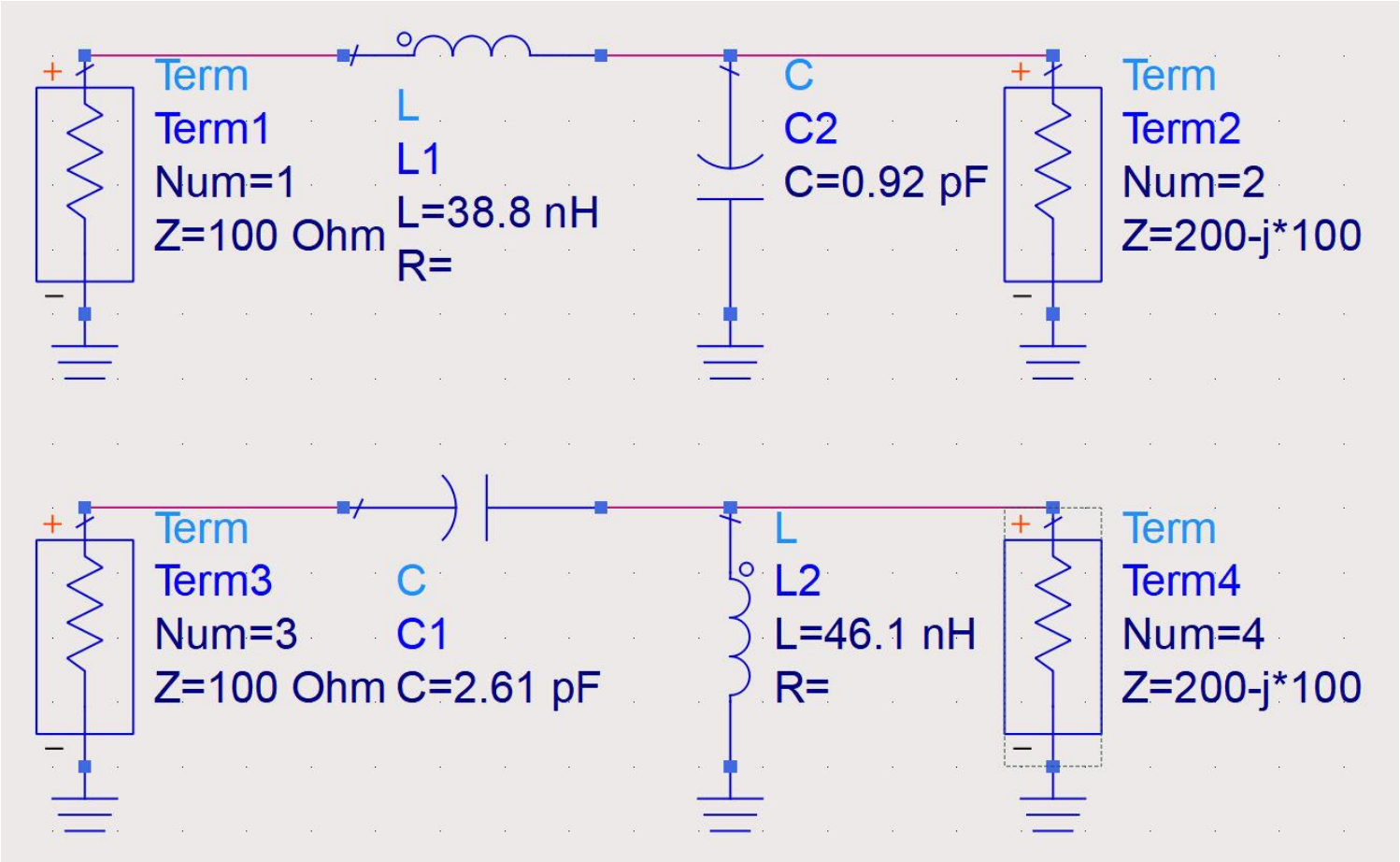
Term
Term1
Num=1
Z=100 Ohm
L
L1
L=38.8 nH
R=
C
C2
C=0.92 pF
Term
Term2
Num=2
Z=200-j*100
Term
Term3
Num=3
Z=100 Ohm
C
C1
C=2.61 pF
L
L2
L=46.1 nH
R=
Term
Term4
Num=4
Z=200-j*100

Exemplu

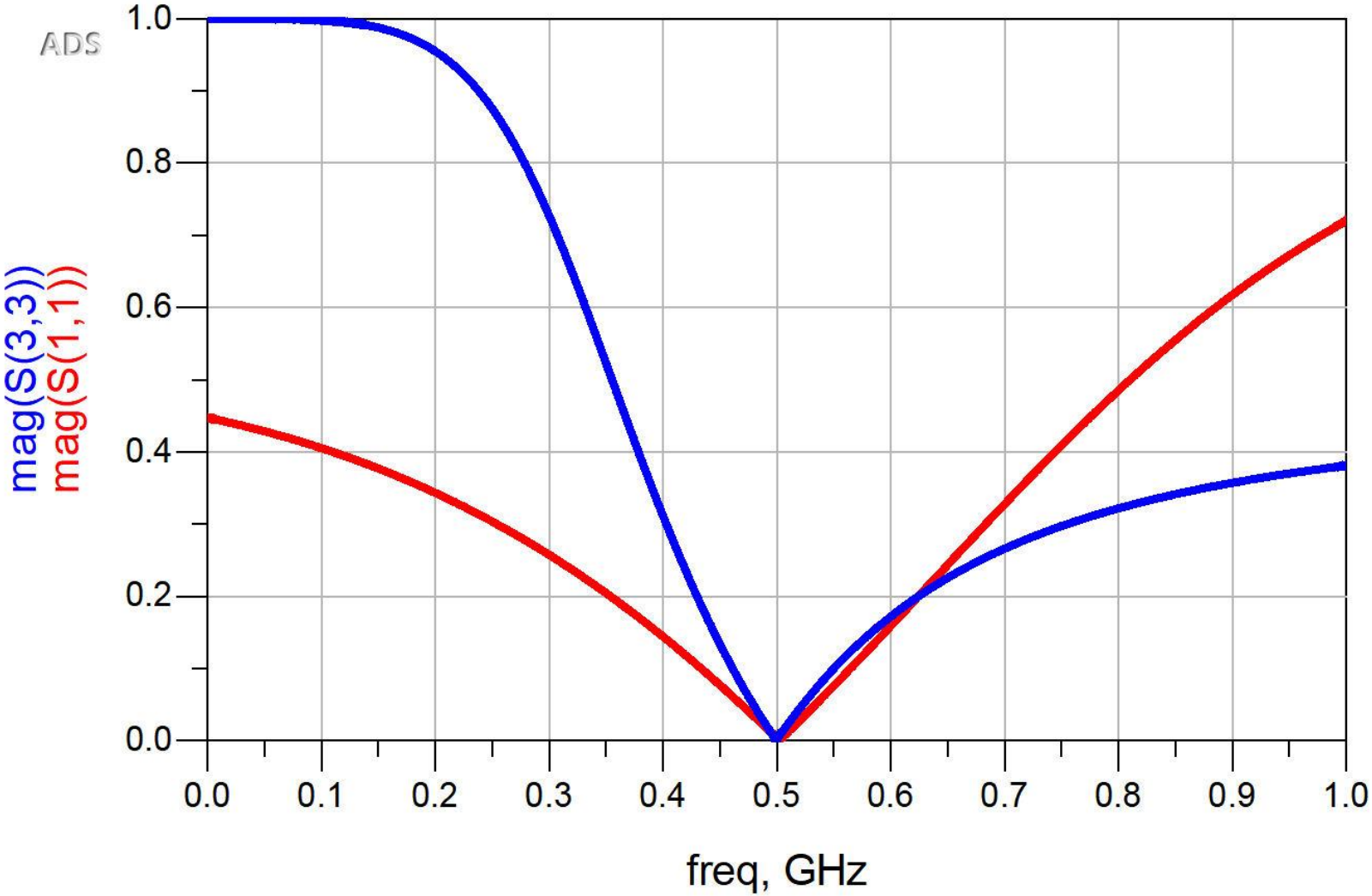
ADS
1.0
0.8
0.6
0.4
0.2
0.0
mag(S(3,3))
mag(S(1,1))
0.0
0.1
0.2
0.3
0.4
0.5
0.6
0.7
0.8
0.9
1.0
freq, GHz

Cercuri de factor de calitate constant

- Diagrama Smith

$$Q = \frac{X}{R} = \frac{G}{B} = const$$

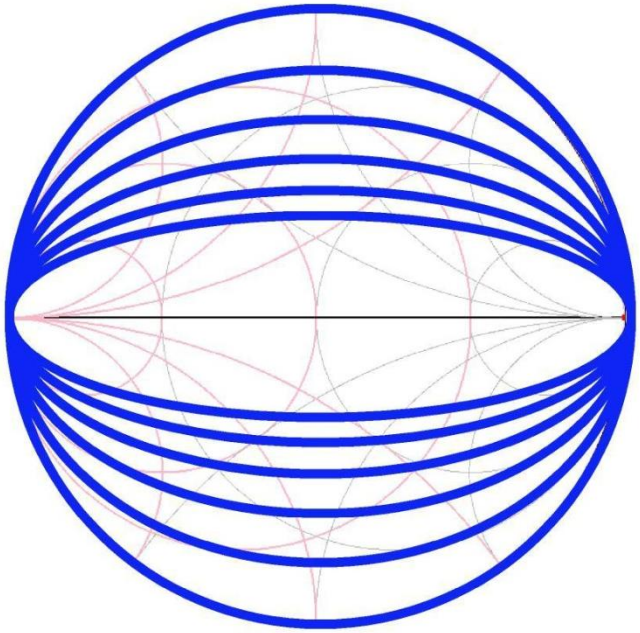

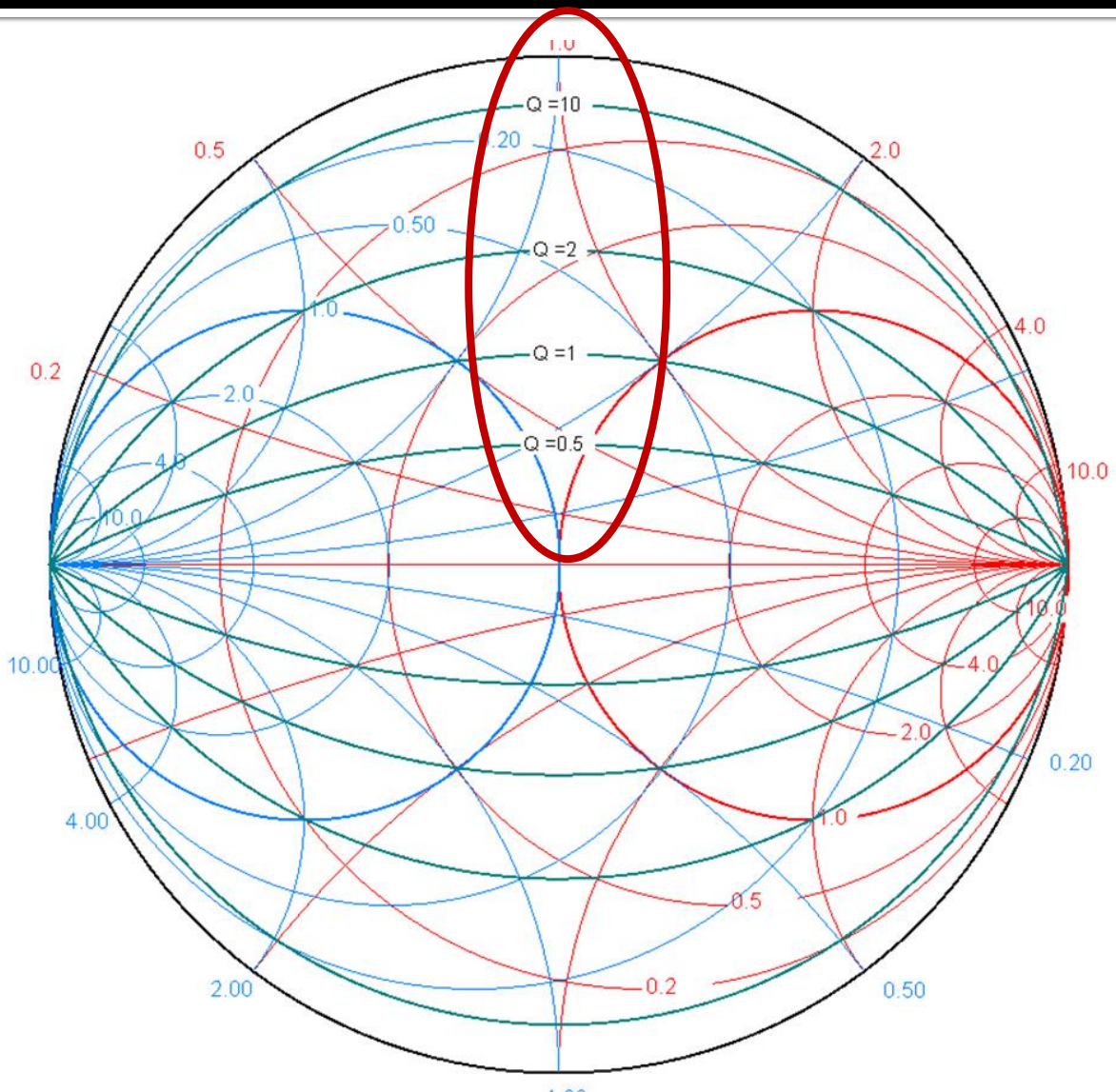

Factor de calitate - banda

- Factor de calitate ridicat echivalent cu banda ingusta

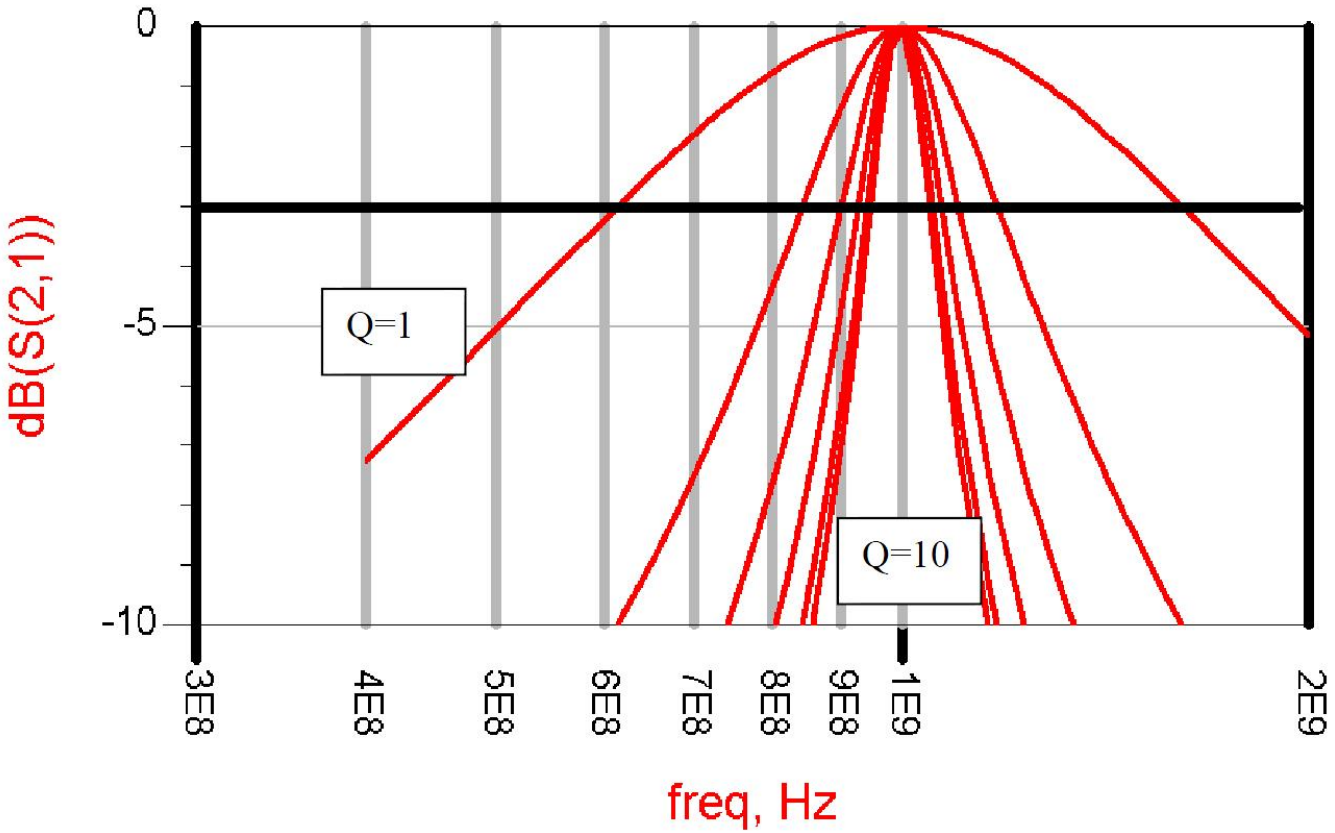

Adaptare - banda

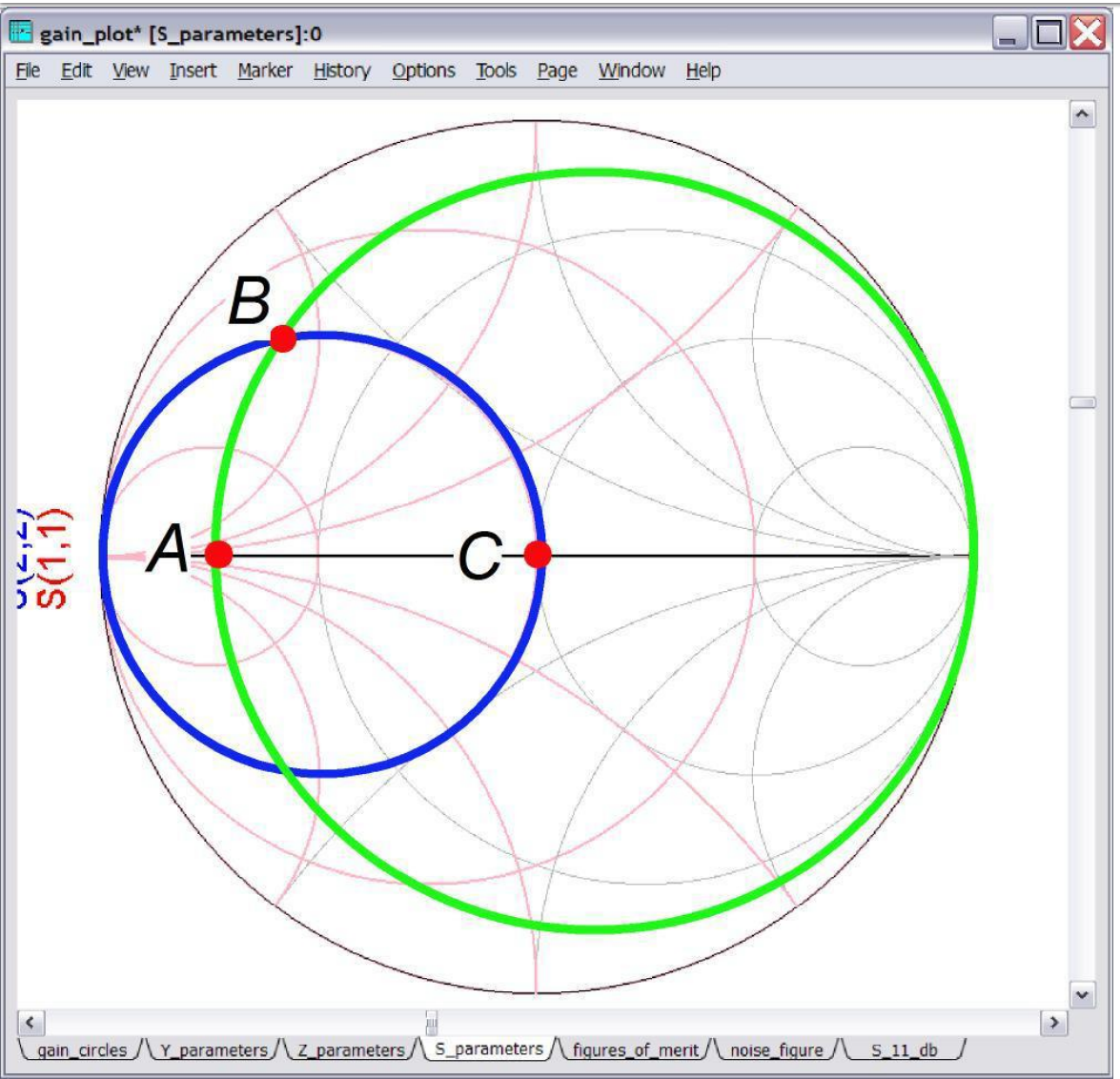

- Pozitia punctului intermediar (B) atins de Γ corespunzatoare celui mai ridicat factor de calitate impune largimea de banda a adaptarii

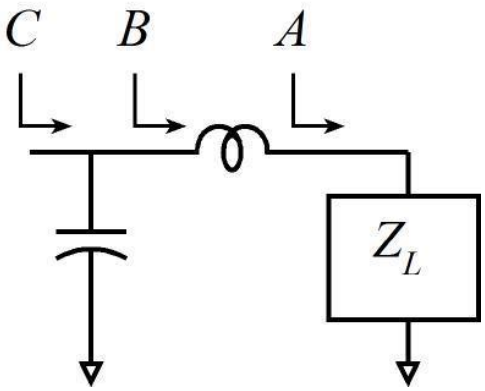

Adaptare - banda

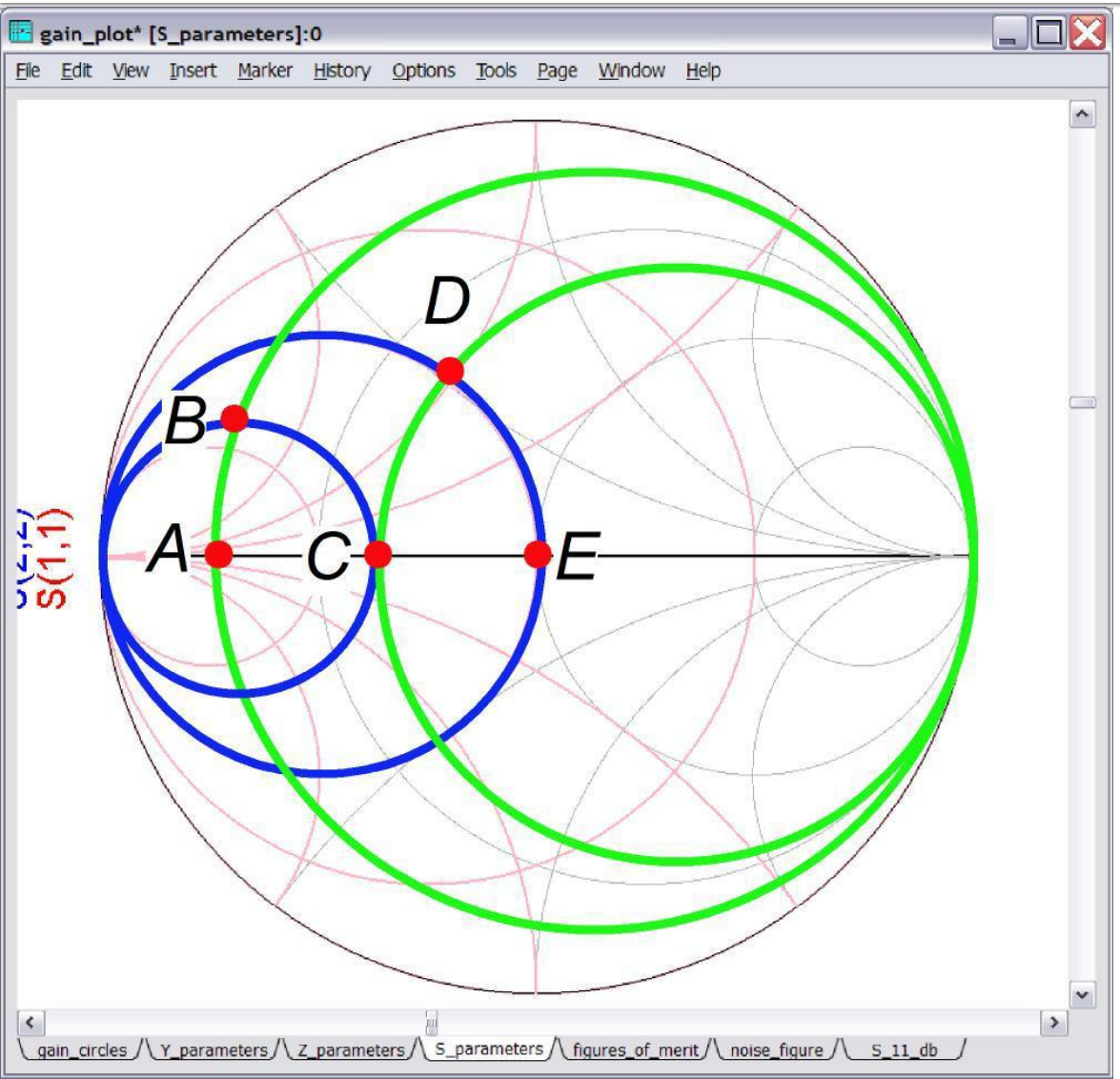

- Adaptare in banda mai larga poate fi obtinuta prin realizarea unor retele in L multiple, fiecare pentru variatii mai mici ale lui Γ, astfel incat toti coeficientii de reflexie intermediari (B, D) sa ocupe pozitii care corespund unui factor de calitate mai mic

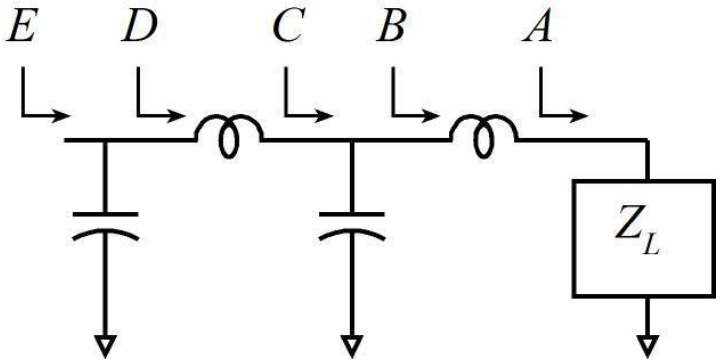

Adaptare - banda

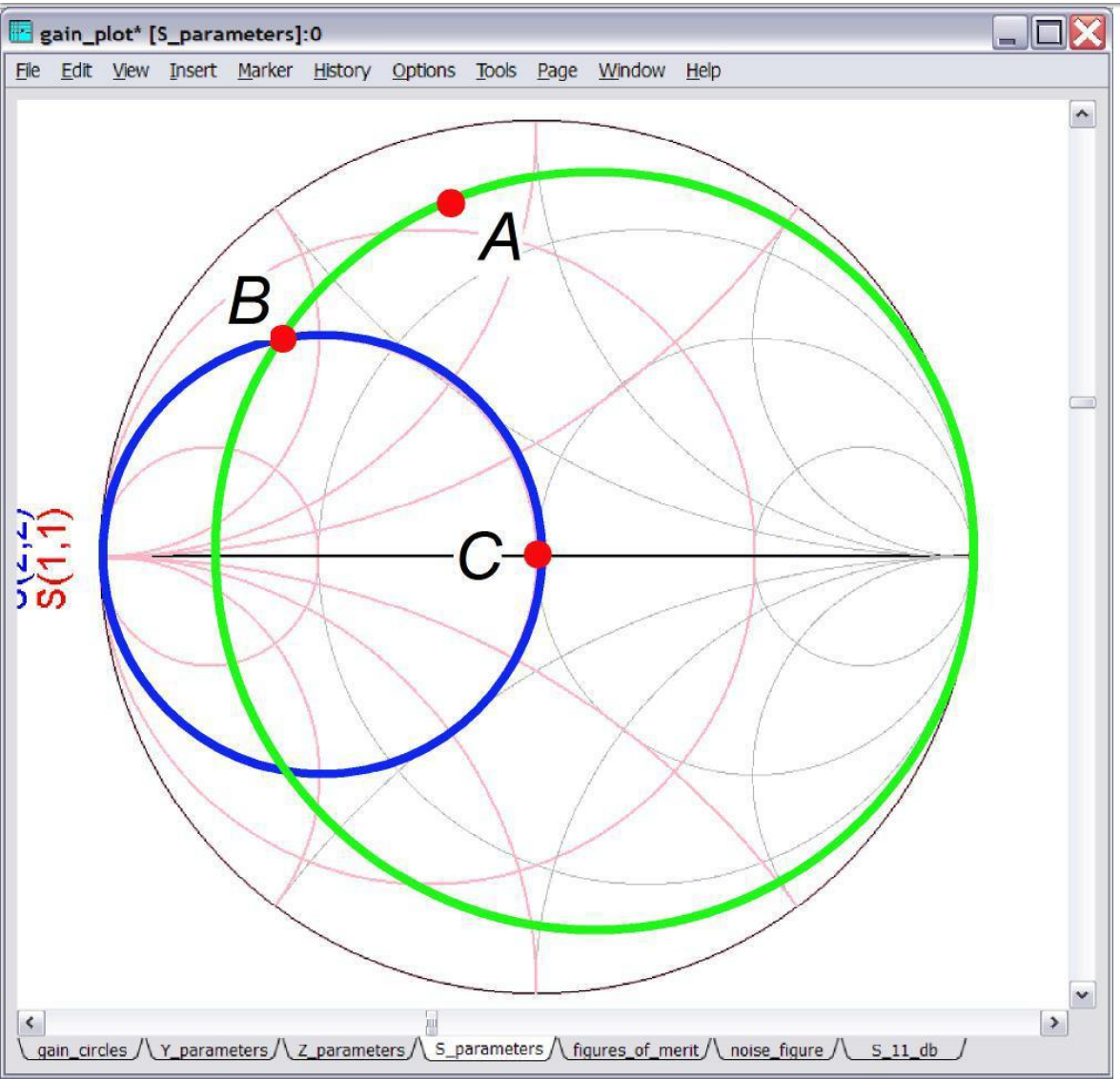

- Pentru pozitii initiale (determinate de sarcina) corespunzatoare unui factor de calitate ridicat (A) banda ingusta a adaptarii este inevitabila

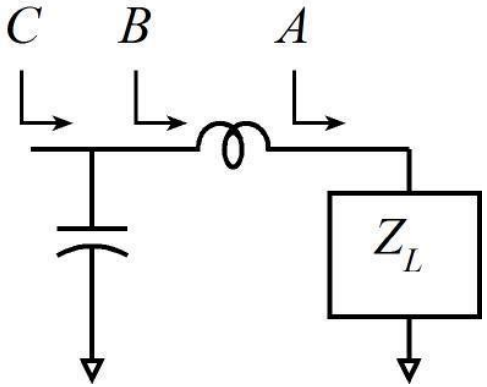

Realizare elemente concentrate

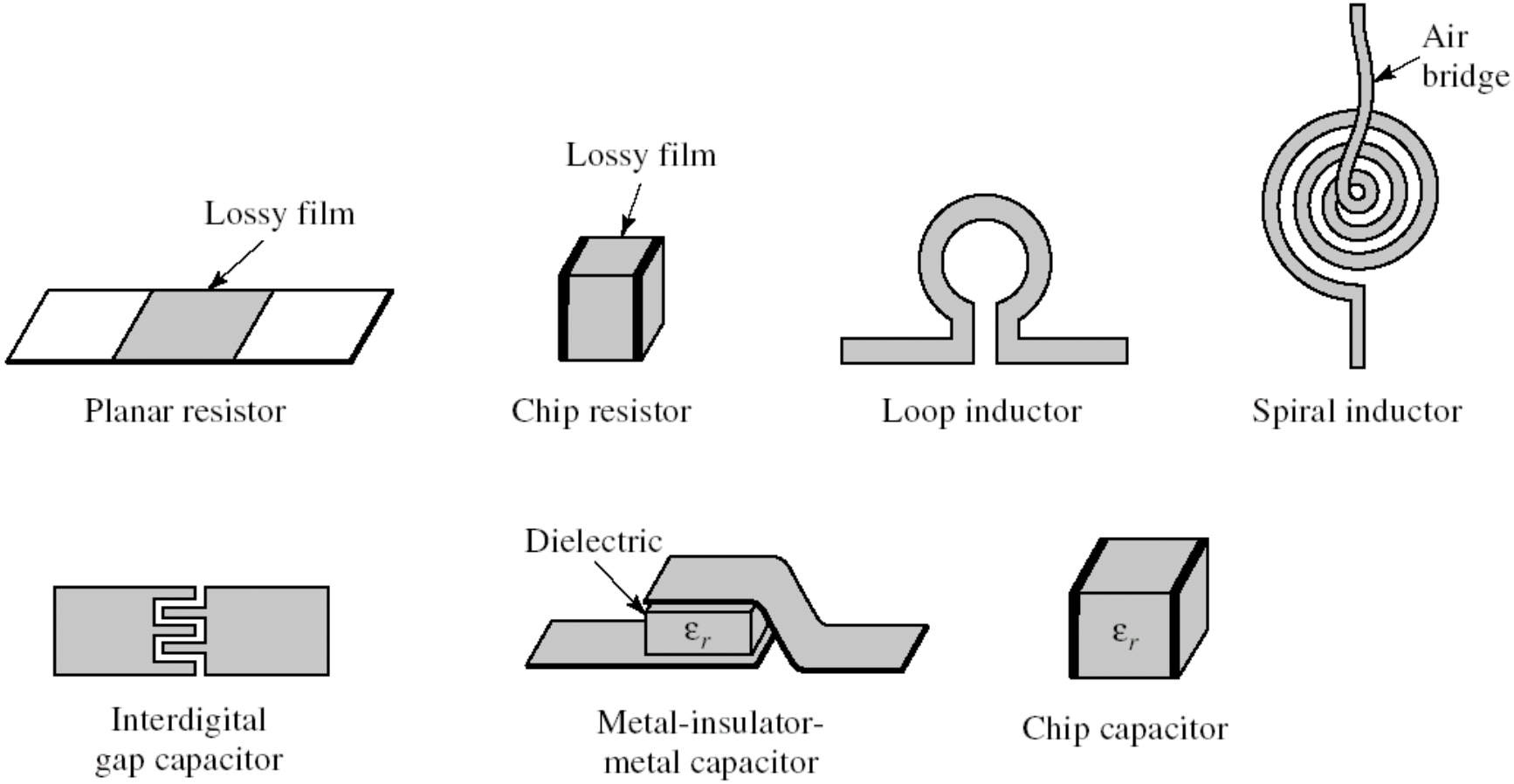

Adaptarea cu sectiuni de linii (stub)

Adaptarea de impedanța

Stub

- Stub=rest, ciot, cotor, **capăt**
- Se evita utilizarea elementelor concentrate
- Se realizează (foarte precis) utilizând liniile de transmisie uzuale ale circuitului
- Se utilizează secțiuni de linie (stub-uri) in serie sau paralel care pot fi:
  - in gol
  - scurtcircuitate
- De obicei liniile in gol sunt mai ușor de implementat si sunt preferate

Diagrama Smith, r=1 si g=1

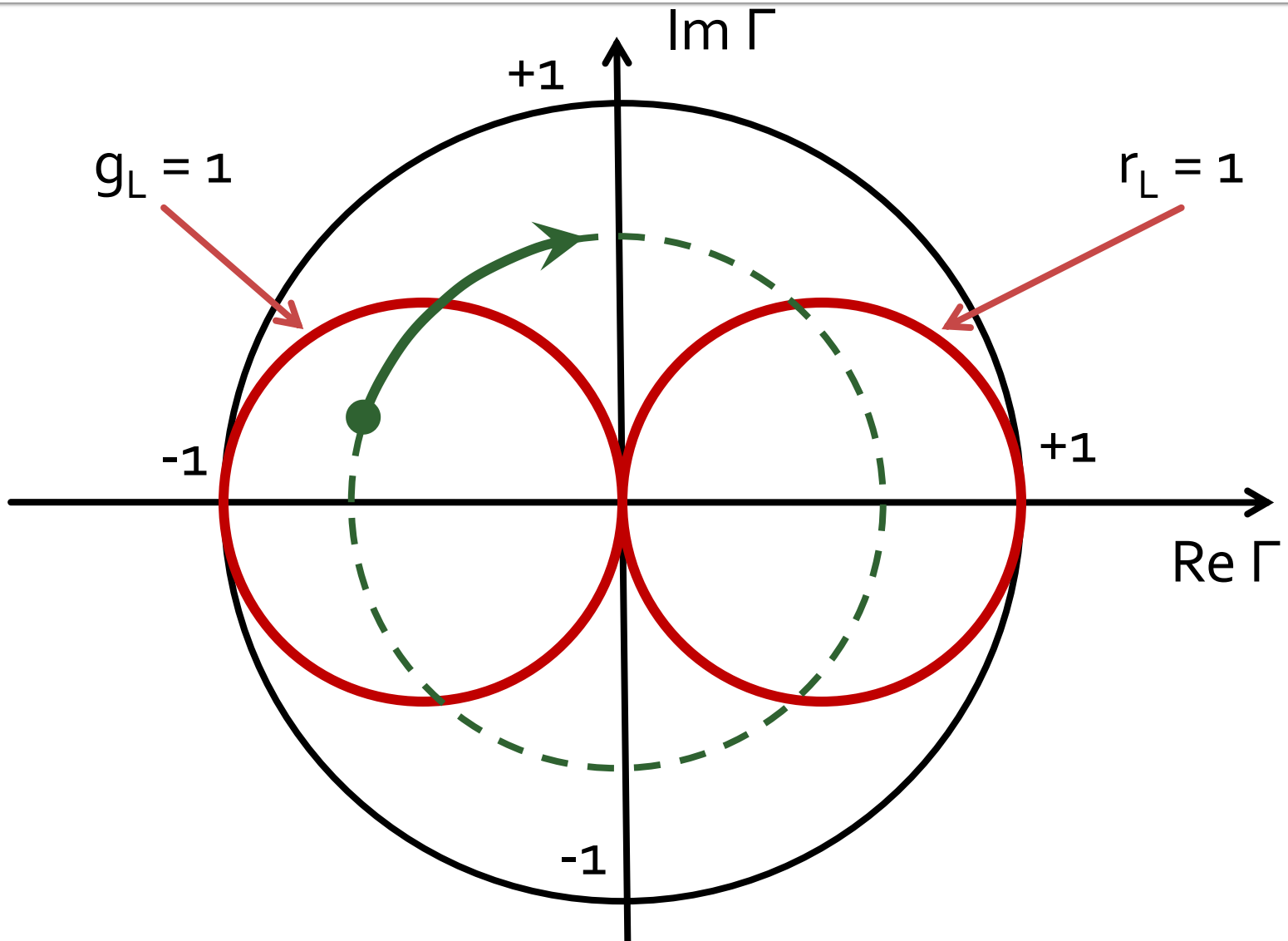

Single stub tuning

- Shunt Stub (sectiune de linie in paralel)

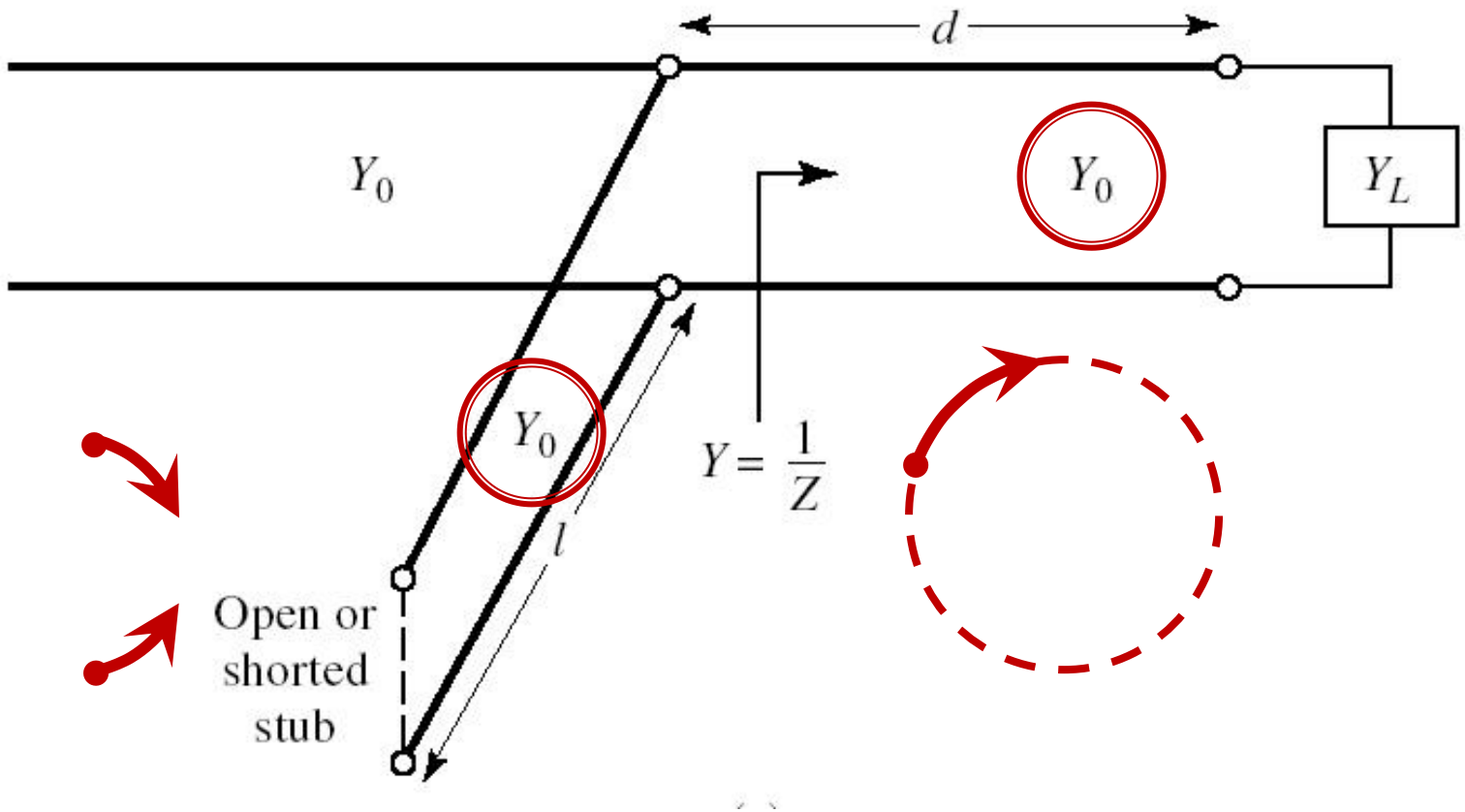

Single stub tuning

- Series Stub (sectiune de linie in serie)
- tehnologic mai dificil de realizat la liniile monofilare (microstrip)

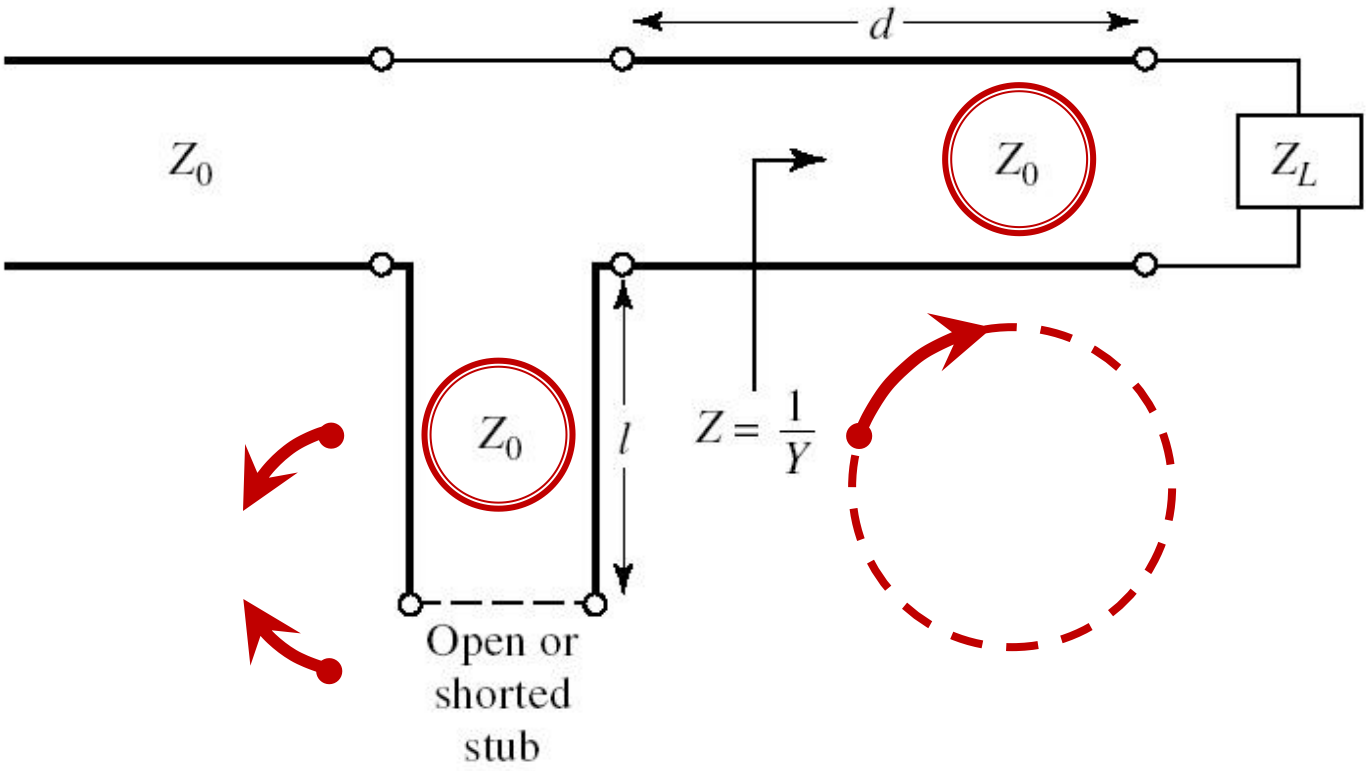

Adaptare, linie serie + susceptanta in paralel

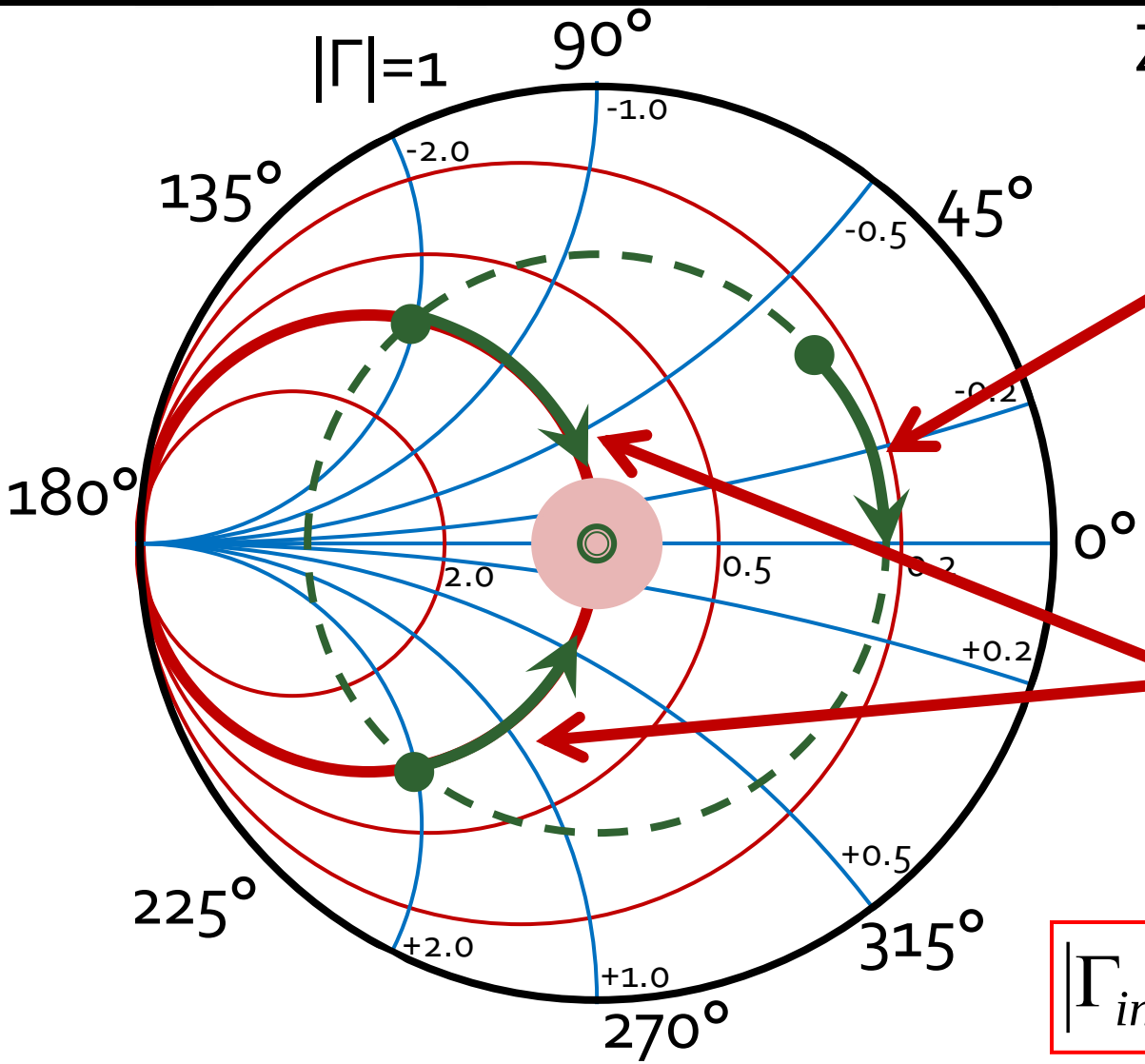

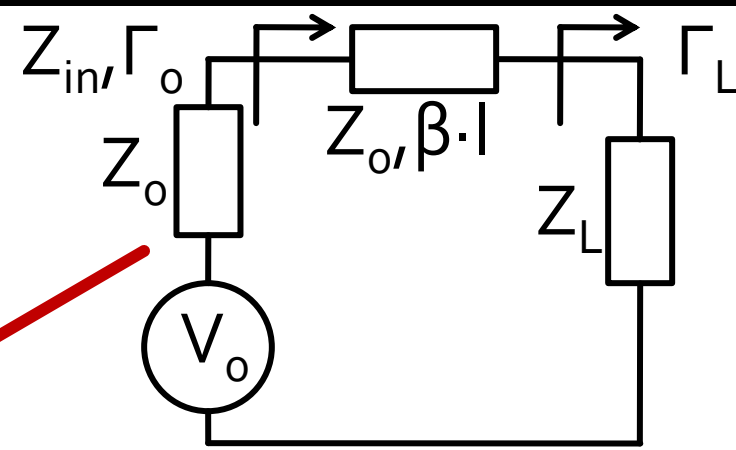

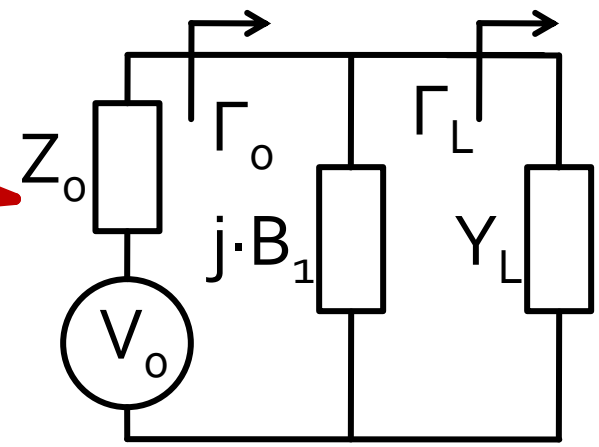

$$\boxed{|\Gamma_{in}| = |\Gamma_L|}$$

$$\boxed{g_{in} = 1}$$

Shunt Stub

Sectiune de linie paralel

Caz 1, Shunt Stub

- Shunt Stub (sectiune de linie in paralel)

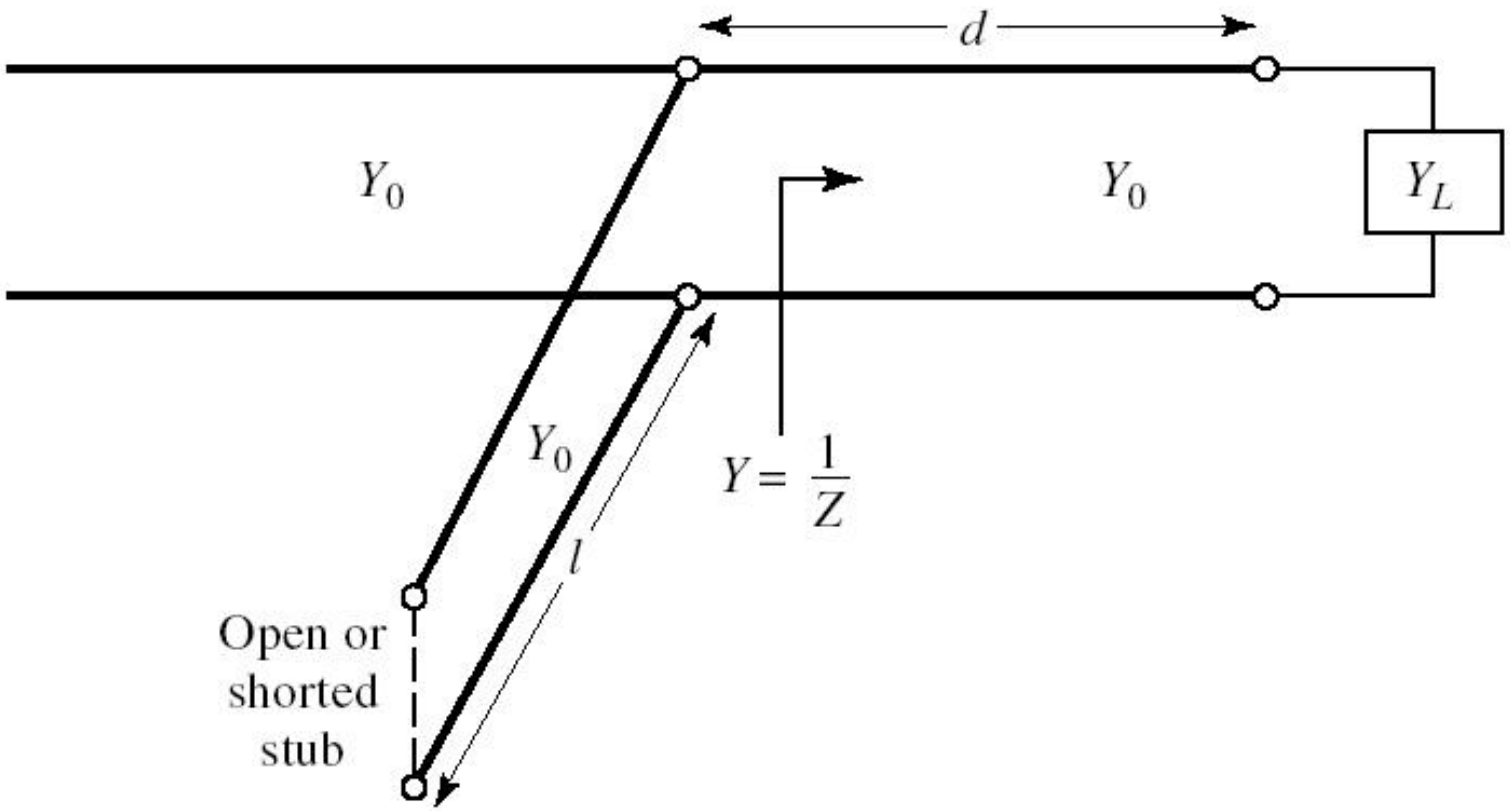

Caz 1, Shunt Stub

- Se utilizeaza o linie de transmisie serie pentru a muta coeficientul de reflexie pe cercul $g_L = 1$
- Se introduce o reactanta in paralel pentru a realiza adaptarea
- Aceasta reactanta se realizeaza cu o linie de transmisie care poate fi dupa nevoie:
  - in gol
  - in scurtcircuit

$$Z_{in} = Z_0 \cdot \frac{Z_L + j \cdot Z_0 \cdot \tan \beta \cdot l}{Z_0 + j \cdot Z_L \cdot \tan \beta \cdot l}$$

$$Z_{in,sc} = j \cdot Z_0 \cdot \tan \beta \cdot l \qquad Z_{in,g} = -j \cdot Z_0 \cdot \cot \beta \cdot l$$

Exemplu, Shunt Stub, sc

- sarcina: 60 Ω serie 0.995 pF la 2GHz
- doua solutii posibile

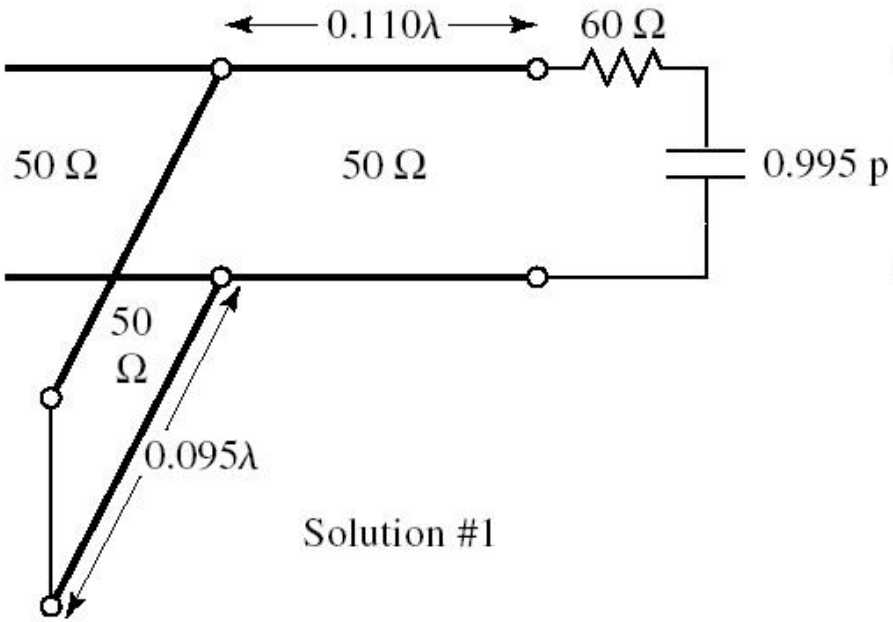

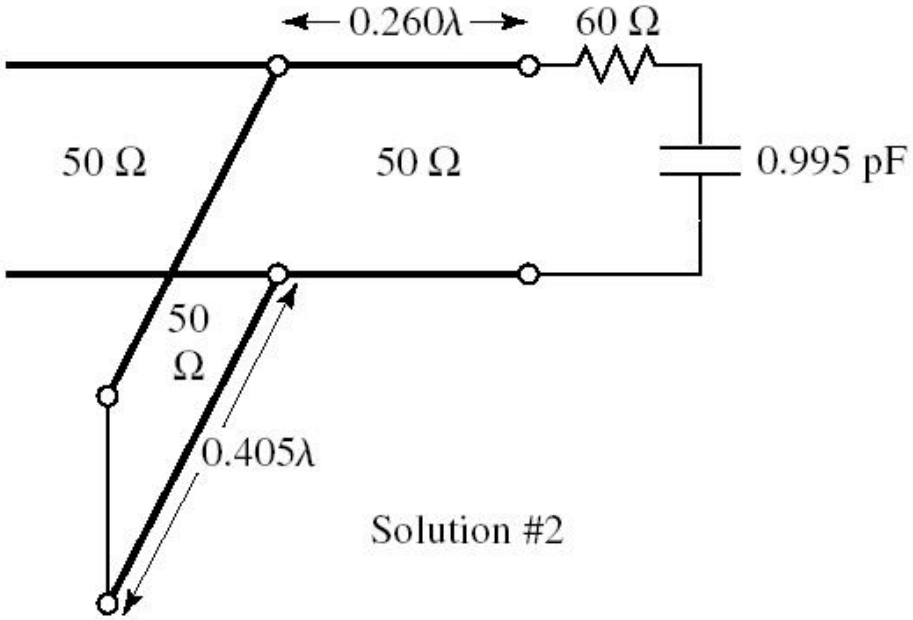

Exemplu, Shunt Stub, sc

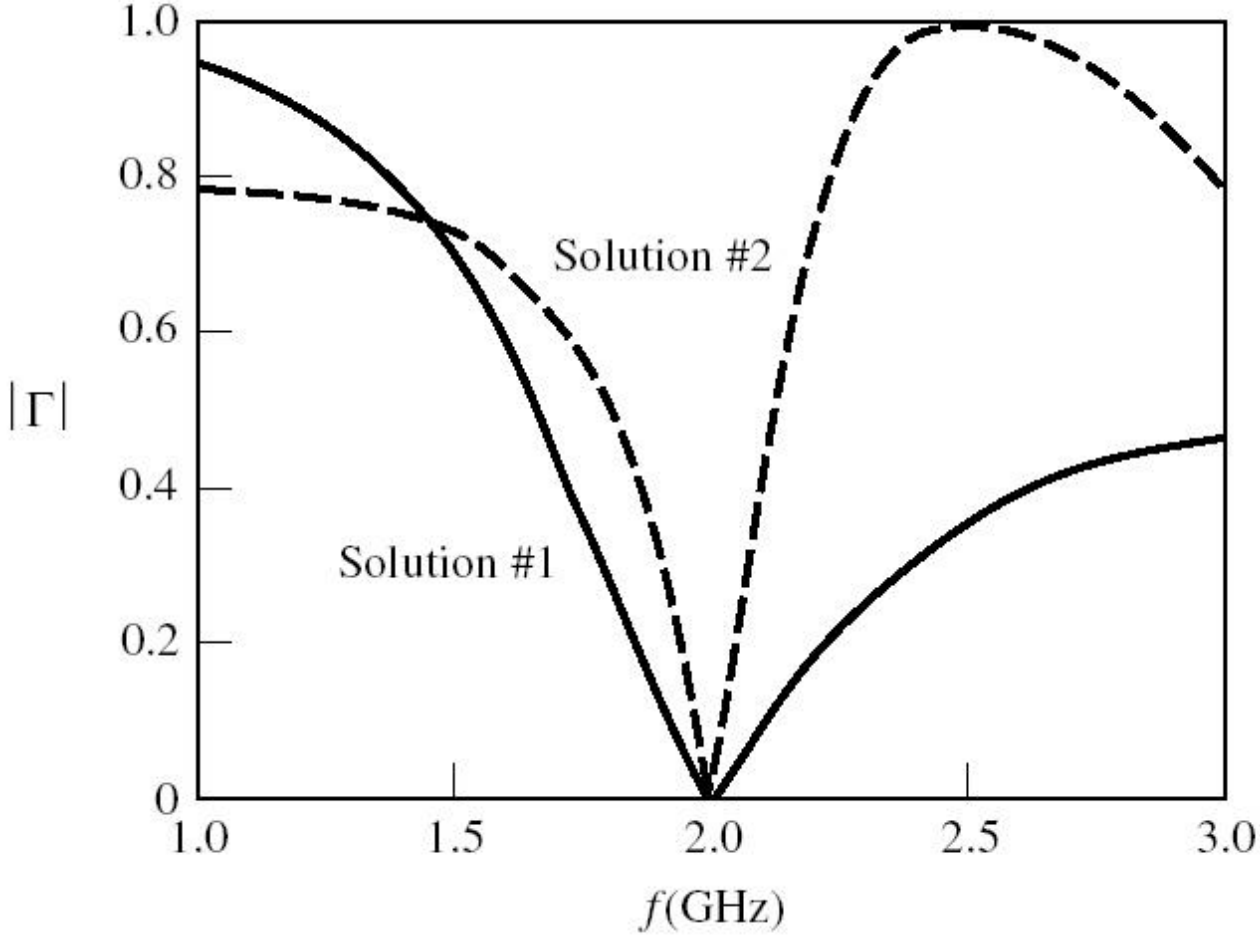

Exemplu, Shunt Stub, sc

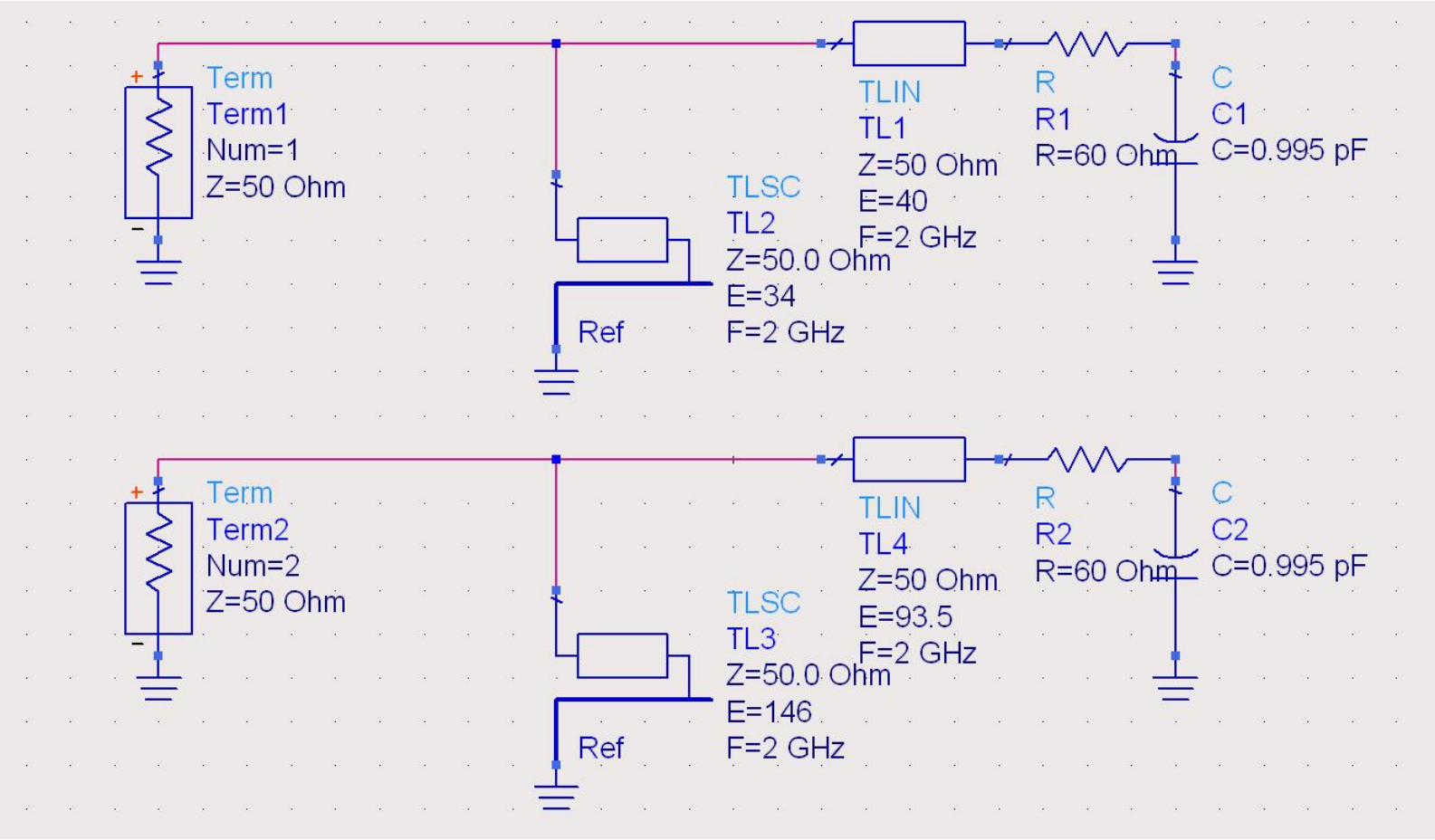

Exemplu, Shunt Stub, sc

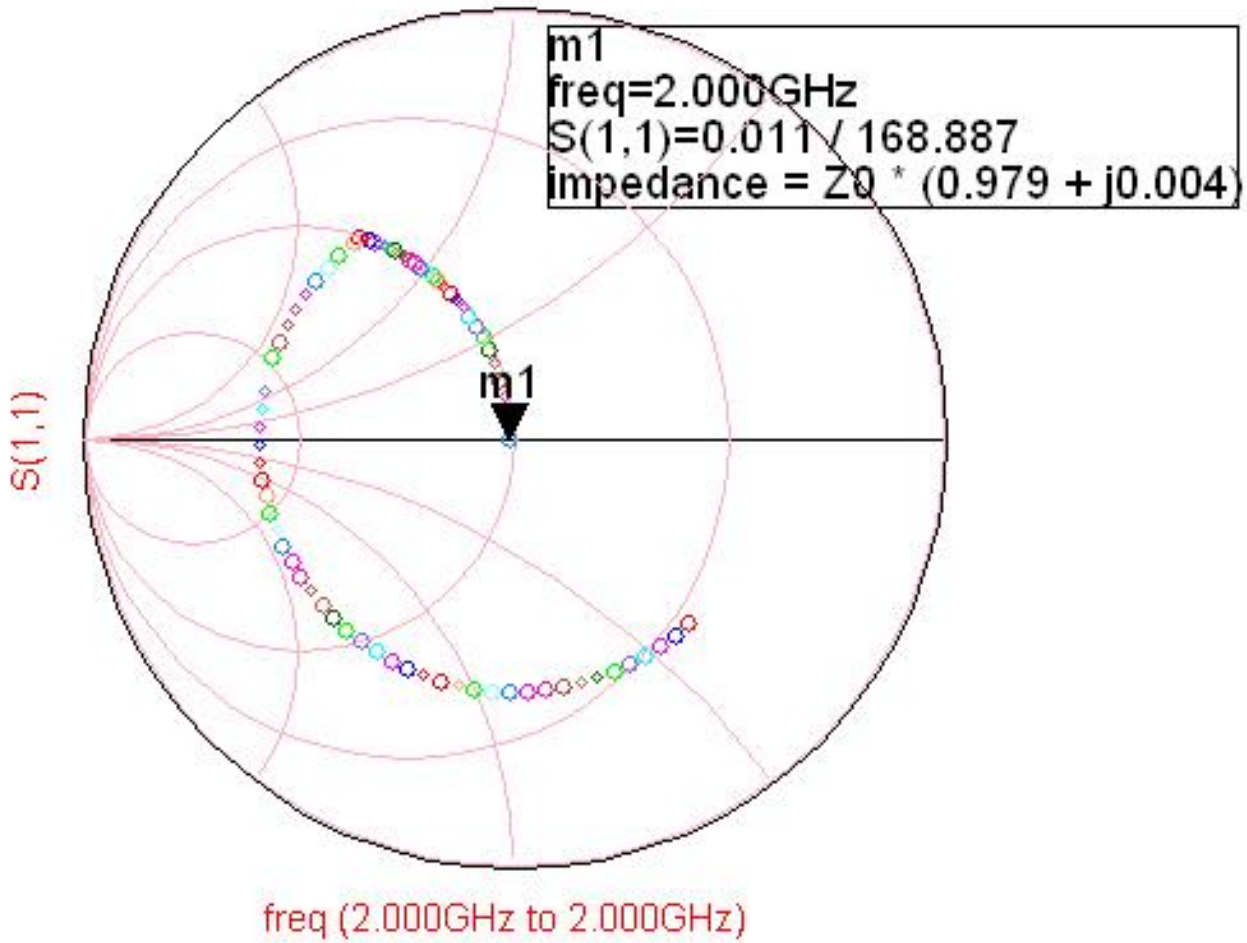

Exemplu, Shunt Stub, sc

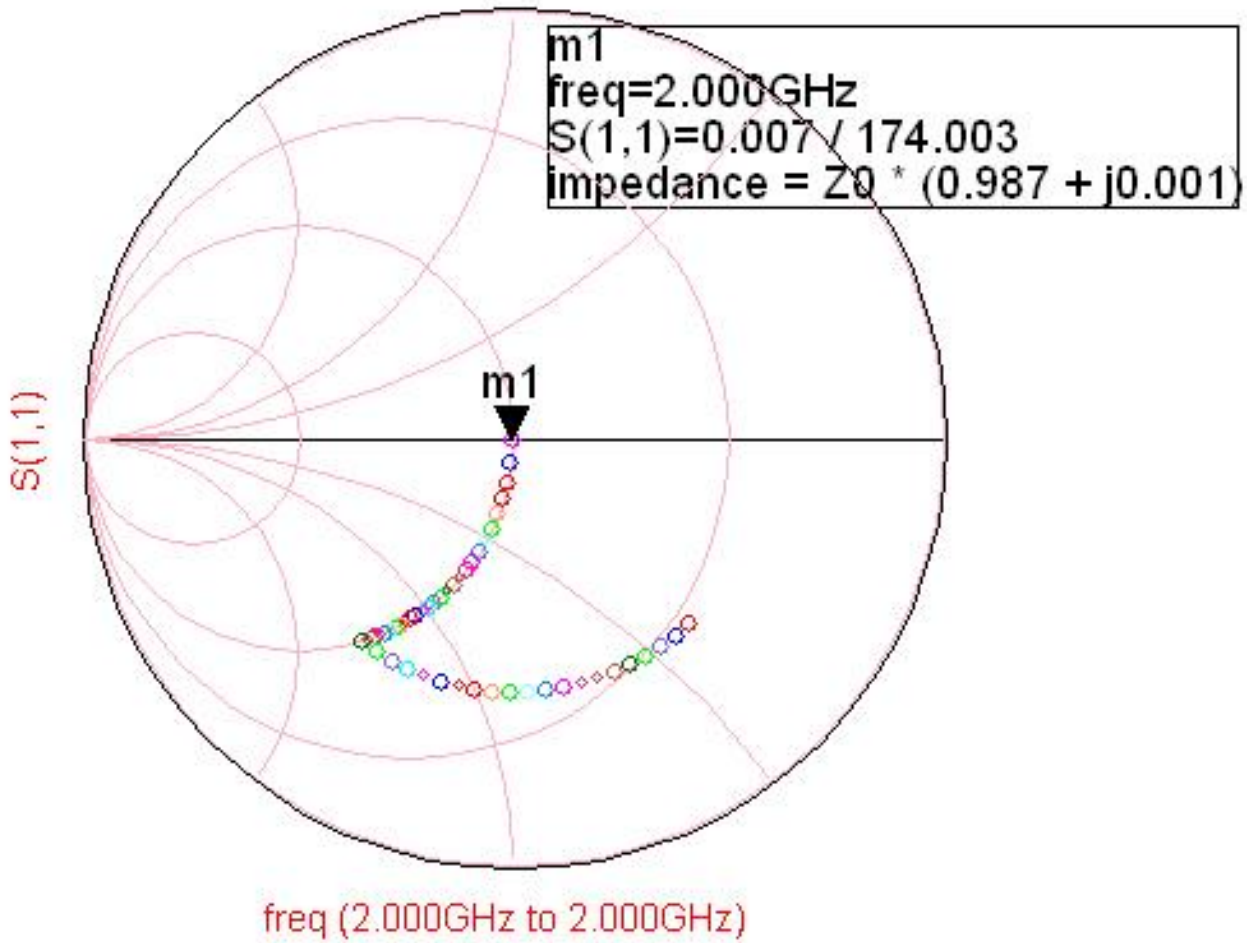

Exemplu, Shunt Stub, sc

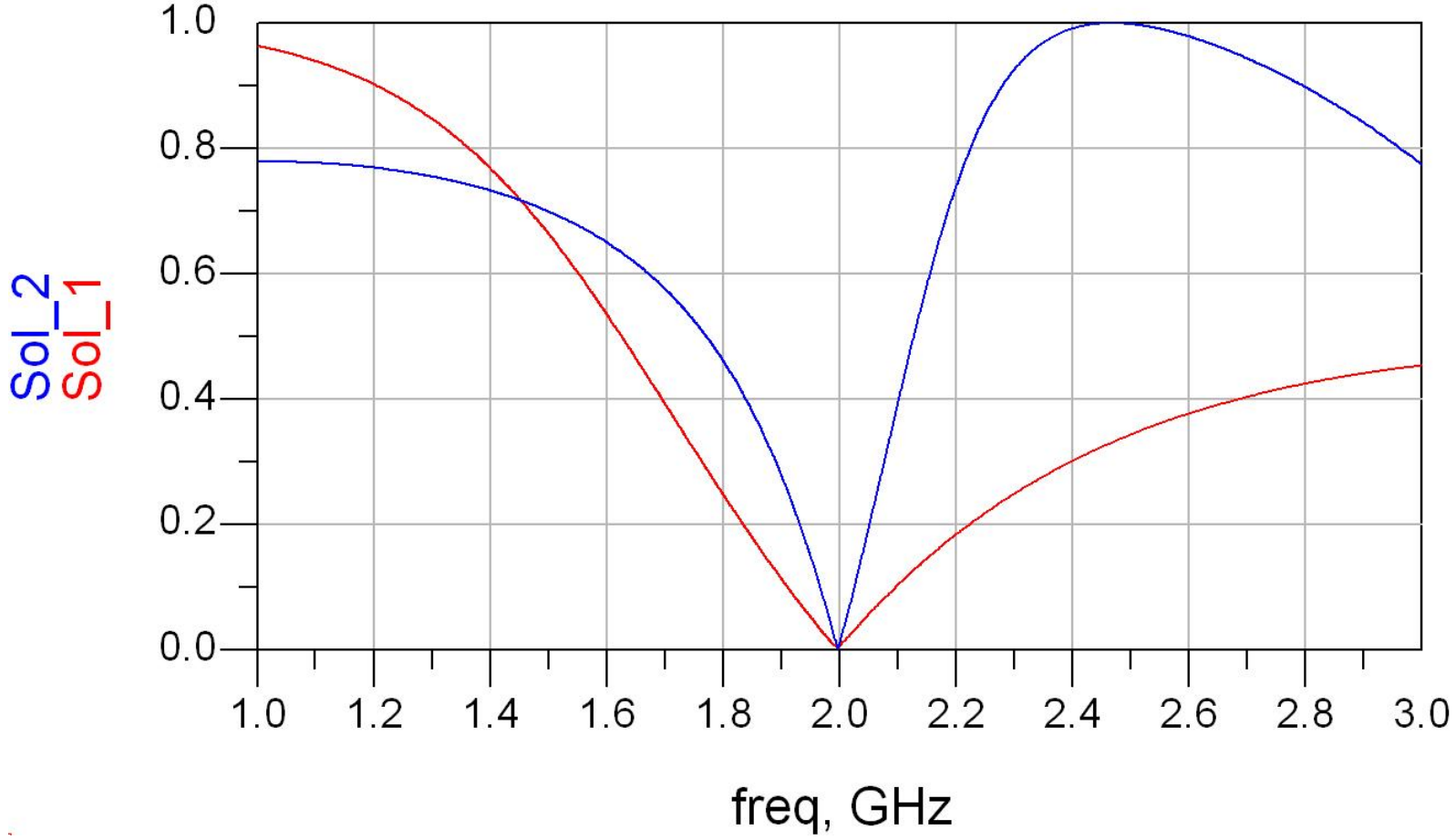

Exemplu, Shunt Stub, sc

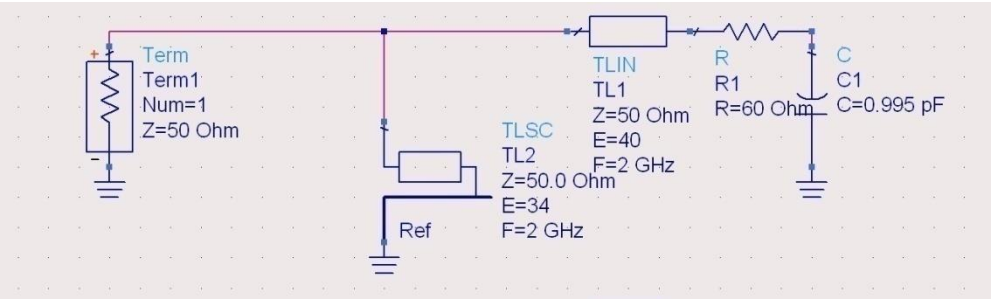

$$l_1 = \frac{40°}{360°} \cdot \lambda = 0.111 \cdot \lambda$$

$$l_2 = \frac{34°}{360°} \cdot \lambda = 0.094 \cdot \lambda$$

$$l_1 = \frac{93.5°}{360°} \cdot \lambda = 0.260 \cdot \lambda$$

$$l_2 = \frac{146°}{360°} \cdot \lambda = 0.406 \cdot \lambda$$

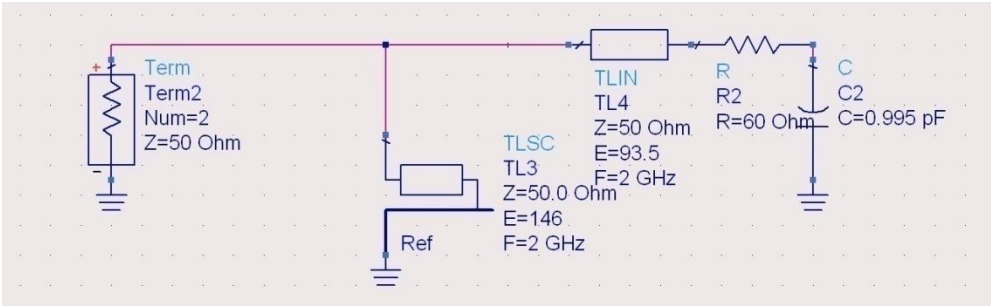

Exemplu, Shunt Stub, gol

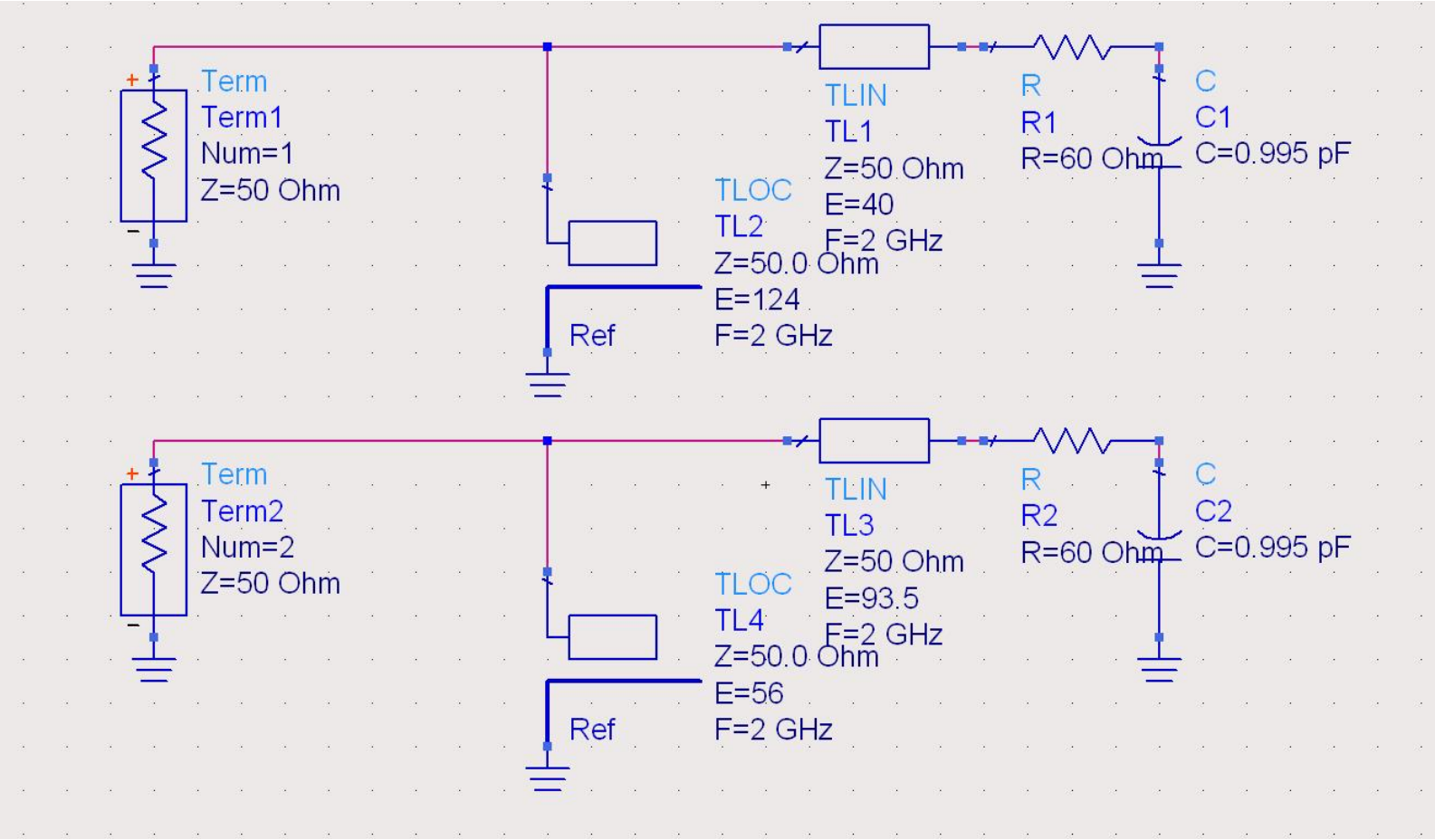

Exemplu, Shunt Stub, gol

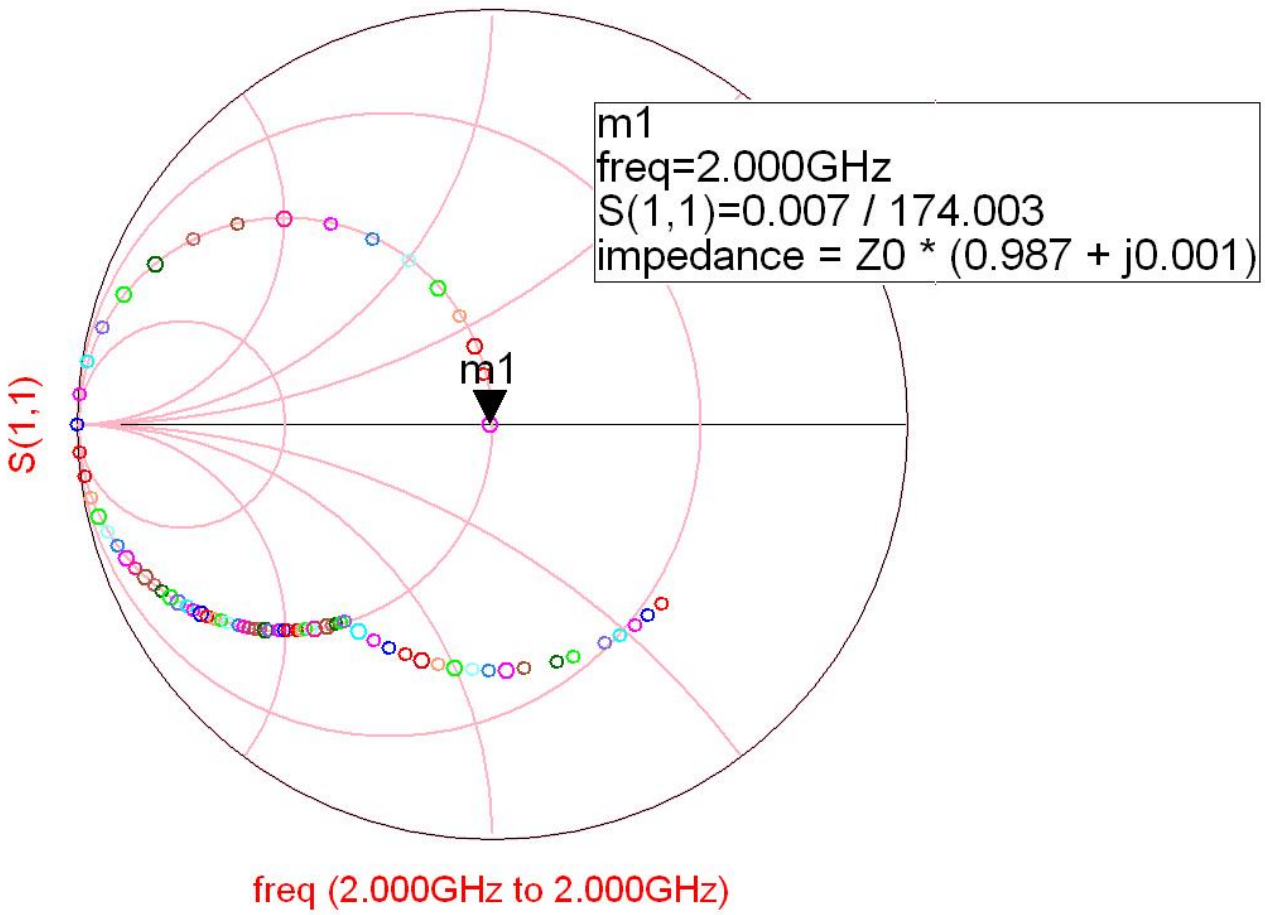

Exemplu, Shunt Stub, gol

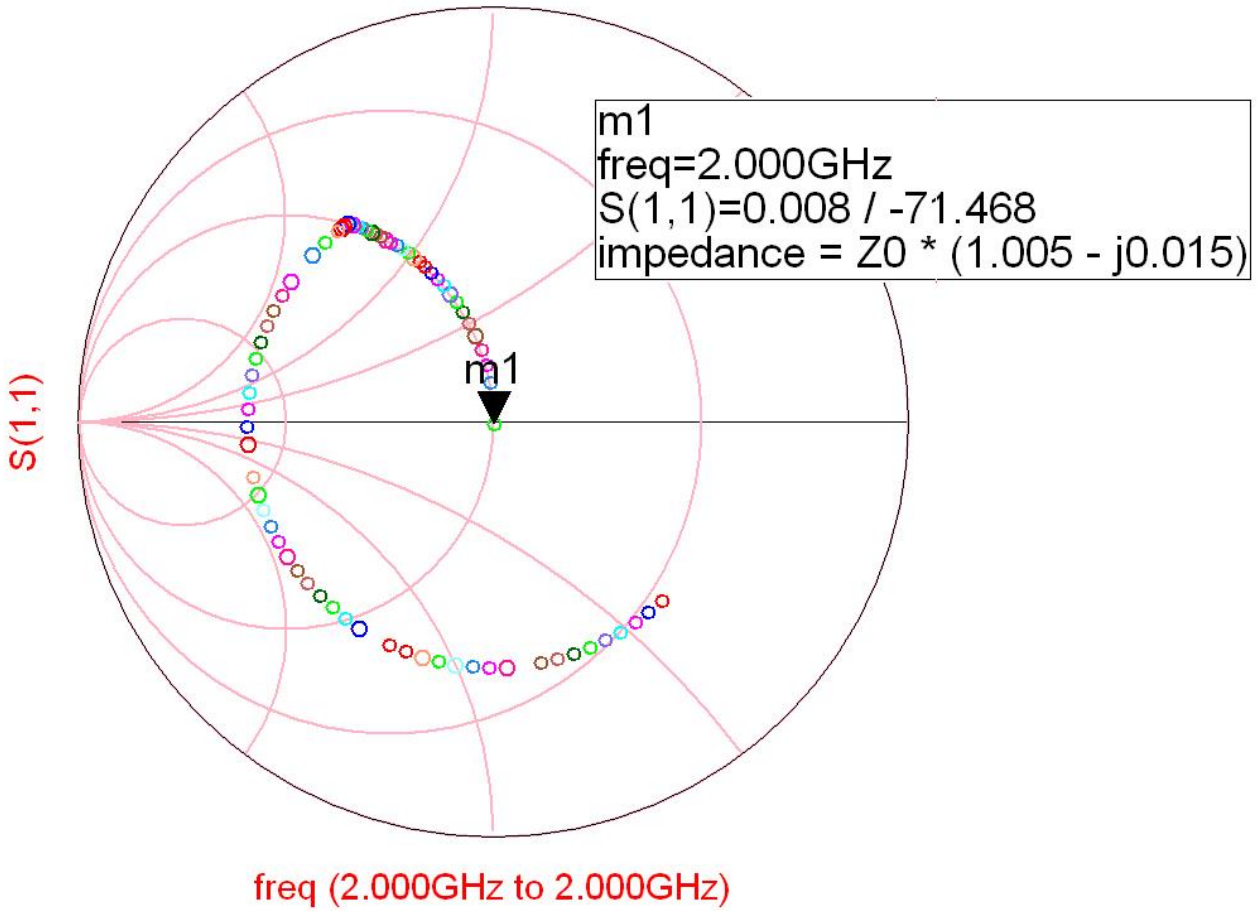

Exemplu, Shunt Stub, gol

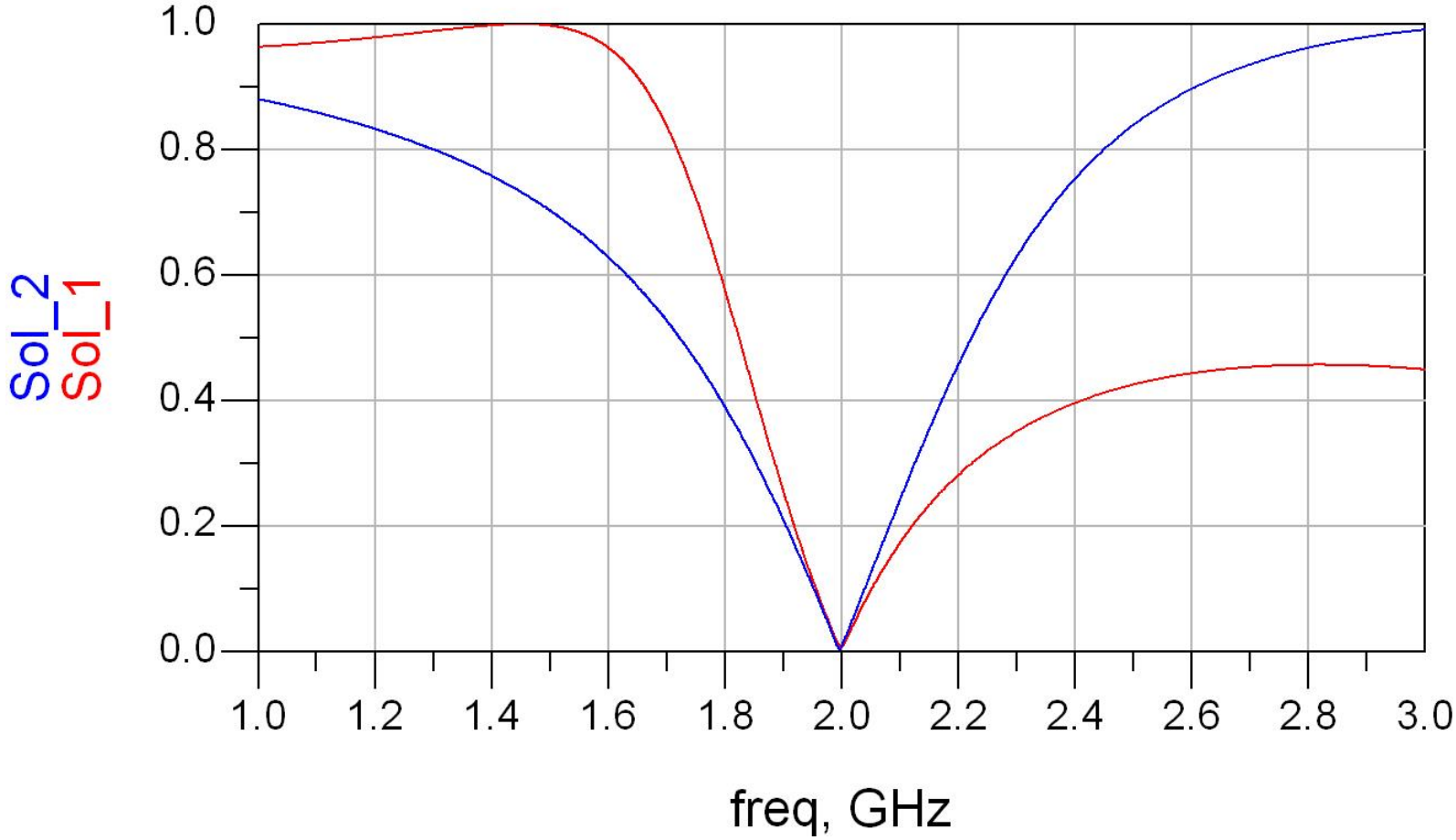

Exemplu, Shunt Stub, gol

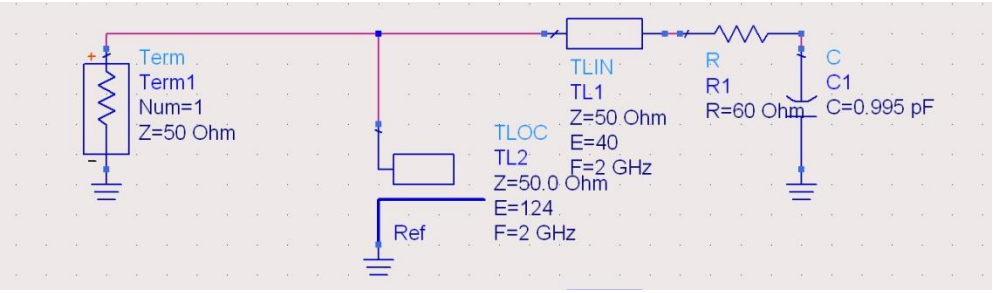

$$l_1 = \frac{40°}{360°} \cdot \lambda = 0.111 \cdot \lambda$$

$$l_2 = \frac{124°}{360°} \cdot \lambda = 0.344 \cdot \lambda = 0.094 \cdot \lambda + \frac{\lambda}{4}$$

$$l_1 = \frac{93.5°}{360°} \cdot \lambda = 0.260 \cdot \lambda$$

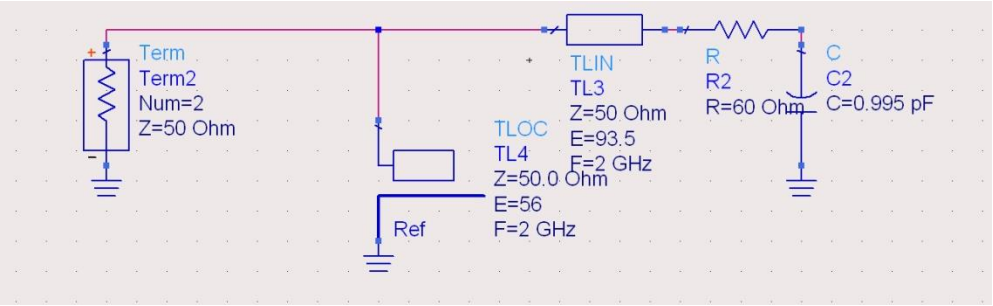

$$l_2 = \frac{56°}{360°} \cdot \lambda = 0.156 \cdot \lambda = 0.406 \cdot \lambda - \frac{\lambda}{4}$$

Stub, observatii

- functiile care ofera impedanta de intrare intr-un stub sunt periodice in functie de lungime (l), functii tip tg/ctg

$$Z_{in,sc} = j \cdot Z_0 \cdot \tan \beta \cdot l \qquad Z_{in,g} = -j \cdot Z_0 \cdot \cot \beta \cdot l$$

  - adunarea si scadere de:

$$E = \beta \cdot l = \pi = 180° \qquad l = k \cdot \frac{\lambda}{2}, \forall k \in \mathbf{N}$$

nu schimba rezultatul (rotatie completa in jurul diagramei – de aici provine gradatia 0.5 lungimi de unda a circumferintei diagramei Smith)

Stub, observatii

- pentru reglaj in vederea adaptarii este preferabila pornirea din punctul neutru (valoarea lungimii liniei care nu influenteaza circuitul)
  - linia in serie: $E = \beta \cdot l = 0$
  - stub: $Z_{in} \to \infty, \quad \tan \beta \cdot l / \cot \beta \cdot l \to \infty, \quad E = 90° / 0°$
- o adaugare sau scadere de sfert de lungime de unda transforma impedanta:

$$Z_{in,sc} = j \cdot Z_0 \cdot \tan \beta \cdot l \qquad Z_{in,g} = -j \cdot Z_0 \cdot \cot \beta \cdot l$$

$$\tan \beta \cdot \left(l + \frac{\lambda}{4} \right) = \tan\left(\beta \cdot l + \frac{\pi}{2} \right) = \frac{\sin(\beta \cdot l + \pi/2)}{\cos(\beta \cdot l + \pi/2)} = \frac{\cos \beta \cdot l}{-\sin \beta \cdot l} = -\cot \beta \cdot l$$

Solutie analitica

Shunt Stub

Solutie analitica, impedante

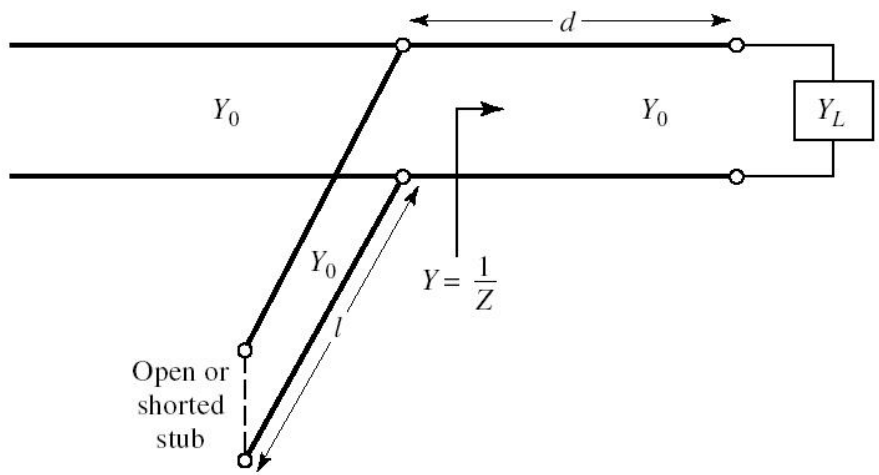

$$Z_L = \frac{1}{Y_L} = R_L + j \cdot X_L$$

$$Z = Z_0 \cdot \frac{(R_L + j \cdot X_L) + j \cdot Z_0 \cdot t}{Z_0 + j \cdot (R_L + j \cdot X_L) \cdot t}$$

$$t \overset{not}{=} \tan \beta \cdot d \qquad Y = G + j \cdot B = \frac{1}{Z}$$

$$G = \frac{R_L \cdot (1 + t^2)}{R_L^2 + (X_L + Z_0 \cdot t)^2} \qquad B = \frac{R_L^2 \cdot t - (Z_0 - X_L \cdot t) \cdot (X_L + Z_0 \cdot t)}{Z_0 \cdot \left[R_L^2 + (X_L + Z_0 \cdot t)^2\right]}$$

- *d* este ales astfel incat $G = Y_0 = \frac{1}{Z_0}$

$$Z_0 \cdot (R_L - Z_0) \cdot t^2 - 2 \cdot X_L \cdot Z_0 \cdot t + \left(R_L \cdot Z_0 - R_L^2 - X_L^2\right) = 0$$

Solutie analitica

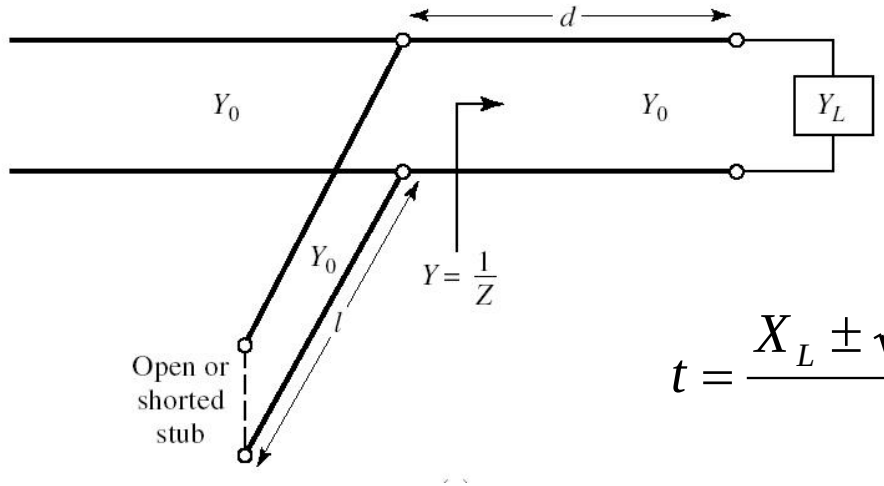

$$t = -\frac{X_L}{2 \cdot Z_0}, \quad R_L = Z_0$$

$$t = \frac{X_L \pm \sqrt{R_L \cdot \left[(Z_0 - R_L)^2 + X_L^2 \right] / Z_0}}{R_L - Z_0} \quad R_L \neq Z_0$$

- ecuatie de gradul 2, 2 solutii posibile
- *d* este ales astfel incat

$$\frac{d}{\lambda} = \begin{cases} \frac{1}{2\pi} \cdot \arctan t & t \geq 0 \\ \frac{1}{2\pi} \cdot (\pi + \arctan t) & t < 0 \end{cases}$$

Solutie analitica

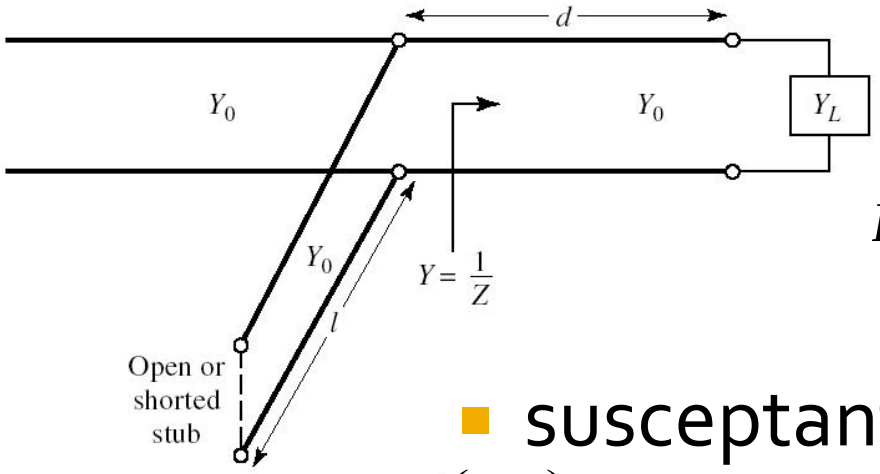

$$B_S = -B$$

$$B = \frac{R_L^2 \cdot t - (Z_0 - X_L \cdot t)\cdot(X_L + Z_0 \cdot t)}{Z_0 \cdot \left[R_L^2 + (X_L + Z_0 \cdot t)^2\right]}$$

- susceptanta de anulare se obtine

$$\frac{l_{gol}}{\lambda} = \frac{1}{2\pi}\cdot\arctan\left(\frac{B_S}{Y_0}\right) = \frac{-1}{2\pi}\cdot\arctan\left(\frac{B}{Y_0}\right)$$

$$\frac{l_{sc}}{\lambda} = \frac{-1}{2\pi}\cdot\arctan\left(\frac{Y_0}{B_S}\right) = \frac{1}{2\pi}\cdot\arctan\left(\frac{Y_0}{B}\right)$$

- pentru **lungimi negative** se adauga λ/2

Calcul analitic, coeficienti de reflexie

- sarcina: 60 Ω serie 0.995 pF la 2GHz

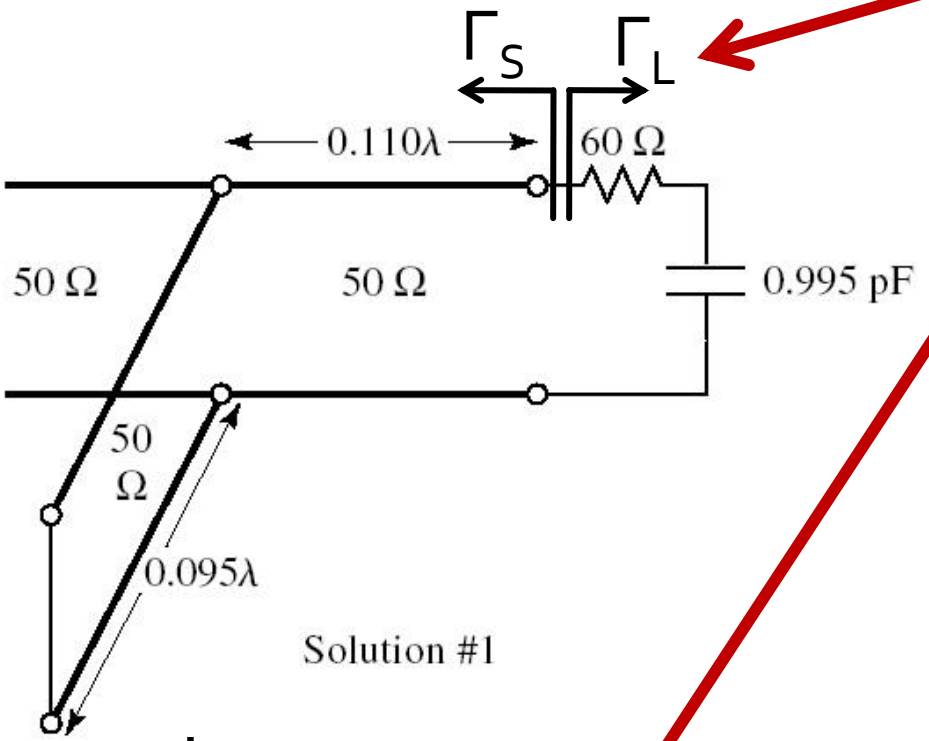

$$Z_L = R_L + \frac{1}{j \cdot \omega \cdot C_L} = 60\Omega - j \cdot 79.977\Omega$$

$$\Gamma_L = \frac{Z_L - Z_0}{Z_L + Z_0} = 0.405 - j \cdot 0.432$$

$$Y_L = \frac{1}{Z_L} = 0.006S + j \cdot 0.008S$$

$$y_L = \frac{Y_L}{Y_0} = 0.3 + j \cdot 0.4$$

- adaptare necesita complex conjugat

$$\Gamma_S = \Gamma_L^* = 0.405 + j \cdot 0.432 \qquad \Gamma_S = 0.593\angle 46.85^\circ \qquad |\Gamma_S| = 0.593; \quad \varphi = 46.85^\circ$$

Calcul analitic, coeficienti de reflexie

- linie serie
  - lungime electrica E= β·l=θ
  - muta coeficientul de reflexie pe cercul g=1
- stub paralel:
  - lungime electrica E= $\beta \cdot l_{sp} = \theta_{sp}$
  - muta coeficientul de reflexie in centrul diagramei Smith (Γ_o=o)

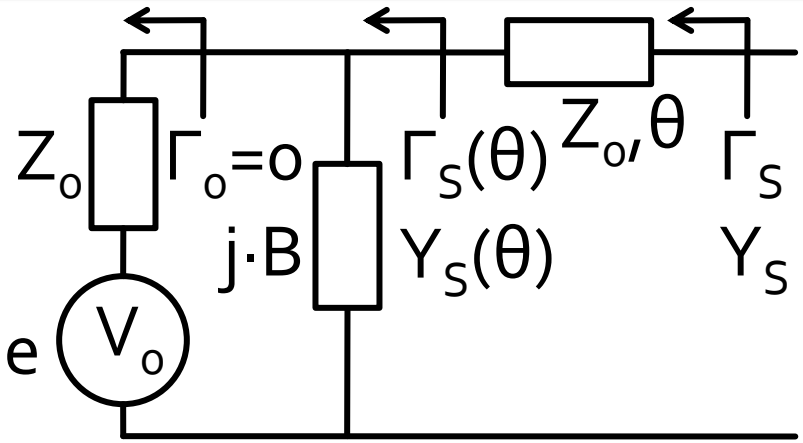

$$y_S = \frac{Y_S}{Y_0} = Y_S \cdot Z_0 = Y_S \cdot 50\Omega$$

$$y_S = \frac{1-\Gamma_S}{1+\Gamma_S} = 0.3 - j \cdot 0.4$$

$$\Gamma_S(\theta) = [\Gamma_L(\theta)]^* = [\Gamma_L \cdot e^{-2j\theta}]^*$$

$$\Gamma_S(\theta) = \Gamma_L^* \cdot e^{2j\theta} = \Gamma_S \cdot e^{2j\theta}$$

$$y_S(\theta) = \frac{1-\Gamma_S(\theta)}{1+\Gamma_S(\theta)} = \frac{1-\Gamma_S \cdot e^{2j\theta}}{1+\Gamma_S \cdot e^{2j\theta}}$$

Calcul analitic, linie serie (dem.)

- Dupa sectiunea de linie cu lungimea electrica θ

$$\mathrm{Re}[y_S(\theta)] = 1 \qquad \mathrm{Im}[y_S(\theta)] = B$$

$$\mathrm{Re}[y_S(\theta)] = \frac{1}{2}\cdot\left[y_S(\theta) + y_S^*(\theta)\right] \qquad \mathrm{Im}[y_S(\theta)] = \frac{1}{2j}\cdot\left[y_S(\theta) - y_S^*(\theta)\right]$$

$$\mathrm{Re}[y_S(\theta)] = \frac{1}{2}\cdot\left[\frac{1-\Gamma_S\cdot e^{2j\theta}}{1+\Gamma_S\cdot e^{2j\theta}} + \frac{1-\Gamma_S^*\cdot e^{-2j\theta}}{1+\Gamma_S^*\cdot e^{-2j\theta}}\right] \qquad \Gamma_S = |\Gamma_S|\cdot e^{j\varphi}$$

$$\mathrm{Re}[y_S(\theta)] = \frac{1}{2}\cdot\left[\frac{\left(1-|\Gamma_S|\cdot e^{j\cdot(\varphi+2\theta)}\right)\cdot\left(1+|\Gamma_S|\cdot e^{-j\cdot(\varphi+2\theta)}\right)+\left(1-|\Gamma_S|\cdot e^{-j\cdot(\varphi+2\theta)}\right)\cdot\left(1+|\Gamma_S|\cdot e^{j\cdot(\varphi+2\theta)}\right)}{\left(1+|\Gamma_S|\cdot e^{-j\cdot(\varphi+2\theta)}\right)\cdot\left(1+|\Gamma_S|\cdot e^{j\cdot(\varphi+2\theta)}\right)}\right]$$

$$\mathrm{Re}[y_S(\theta)] = \frac{1}{2}\cdot\left[\frac{2-2\cdot|\Gamma_S|^2}{1+|\Gamma_S|^2+2\cdot|\Gamma_S|\cdot\cos(\varphi+2\theta)}\right] = 1 \quad\Rightarrow\quad \boxed{\cos(\varphi+2\theta) = -|\Gamma_S|}$$

Calcul analitic, linie serie (calcul)

- Ecuatia pentru calcularea θ (linie serie)

$$\mathrm{Re}\left[y_S(\theta)\right] = 1 \Rightarrow \qquad \cos(\varphi + 2\theta) = -|\Gamma_S|$$

$$\Gamma_S = |\Gamma_S| \cdot e^{j\varphi} \qquad \Gamma_S = 0.593\angle 46.85^\circ \qquad |\Gamma_S| = 0.593; \quad \varphi = 46.85^\circ$$

- doua solutii posibile, normate la intervalul 0÷180°
  - se adauga λ/2 (180°) dupa nevoie

$$\theta = \frac{1}{2} \cdot \left[\pm \cos^{-1}\left(-|\Gamma_S|\right) - \varphi + k \cdot 360^\circ\right] = \frac{1}{2} \cdot \left[\pm \cos^{-1}\left(-|\Gamma_S|\right) - \varphi\right] + k \cdot 180^\circ$$

$$\forall k \in N$$

$$\cos(\varphi + 2\theta) = -0.593 \Rightarrow \qquad (\varphi + 2\theta) = \pm 126.35^\circ$$

$$(46.85^\circ + 2\theta) = \begin{cases} +126.35^\circ \\ -126.35^\circ \end{cases} \qquad \theta = \begin{cases} +39.7^\circ \\ -86.6^\circ + 180^\circ = +93.4^\circ \end{cases}$$

Calcul analitic, stub paralel (dem.)

- Ecuatia pentru calcularea stub-ului paralel θ_{sp}

$$\mathrm{Re}[y_S(\theta)] = 1 \qquad \cos(\varphi + 2\theta) = -|\Gamma_S| \qquad \mathrm{Im}[y_S(\theta)] = \frac{1}{2j}\cdot\left[y_S(\theta) - y_S^*(\theta)\right]$$

$$\mathrm{Im}[y_S(\theta)] = \frac{1}{2j}\cdot\left[\frac{1-\Gamma_S\cdot e^{2j\theta}}{1+\Gamma_S\cdot e^{2j\theta}} - \frac{1-\Gamma_S^*\cdot e^{-2j\theta}}{1+\Gamma_S^*\cdot e^{-2j\theta}}\right] \qquad \Gamma_S = |\Gamma_S|\cdot e^{j\varphi}$$

$$\mathrm{Im}[y_S(\theta)] = \frac{1}{2j}\cdot\left[\frac{\left(1-|\Gamma_S|\cdot e^{j\cdot(\varphi+2\theta)}\right)\cdot\left(1+|\Gamma_S|\cdot e^{-j\cdot(\varphi+2\theta)}\right)-\left(1-|\Gamma_S|\cdot e^{-j\cdot(\varphi+2\theta)}\right)\cdot\left(1+|\Gamma_S|\cdot e^{j\cdot(\varphi+2\theta)}\right)}{\left(1+|\Gamma_S|\cdot e^{-j\cdot(\varphi+2\theta)}\right)\cdot\left(1+|\Gamma_S|\cdot e^{j\cdot(\varphi+2\theta)}\right)}\right]$$

$$\mathrm{Im}[y_S(\theta)] = \frac{1}{2j}\cdot\left[\frac{2\cdot|\Gamma_S|\cdot e^{-j\cdot(\varphi+2\theta)} - 2\cdot|\Gamma_S|\cdot e^{+j\cdot(\varphi+2\theta)}}{1+|\Gamma_S|^2 + 2\cdot|\Gamma_S|\cdot\cos(\varphi+2\theta)}\right] = \frac{-2\cdot|\Gamma_S|\cdot\sin(\varphi+2\theta)}{1+|\Gamma_S|^2 + 2\cdot|\Gamma_S|\cdot\cos(\varphi+2\theta)}$$

$$\cos(\varphi+2\theta) = -|\Gamma_S| \Rightarrow \qquad \mathrm{Im}[y_S(\theta)] = \frac{-2\cdot|\Gamma_S|\cdot\sin(\varphi+2\theta)}{1-|\Gamma_S|^2}$$

Calcul analitic, stub paralel (dem.)

- Ecuatia pentru calcularea stub-ului paralel

$$\cos(\varphi+2\theta)=-|\Gamma_S| \Rightarrow \qquad \sin(\varphi+2\theta)=\pm\sqrt{1-|\Gamma_S|^2}$$

$$\mathrm{Im}[y_S(\theta)]=\frac{-2\cdot|\Gamma_S|\cdot\sin(\varphi+2\theta)}{1-|\Gamma_S|^2} \Rightarrow \qquad \mathrm{Im}[y_S(\theta)]=\frac{\mp 2\cdot|\Gamma_S|}{\sqrt{1-|\Gamma_S|^2}}$$

- doua situatii

$$\varphi+2\theta\in[0°,180°] \Rightarrow \sin(\varphi+2\theta)\geq 0 \quad \begin{cases} \sin(\varphi+2\theta)=\sqrt{1-|\Gamma_S|^2} \\ \mathrm{Im}[y_S(\theta)]=\dfrac{-2\cdot|\Gamma_S|}{\sqrt{1-|\Gamma_S|^2}} \end{cases}$$

$$\varphi+2\theta\in(-180°,0°) \Rightarrow \sin(\varphi+2\theta)<0 \quad \begin{cases} \sin(\varphi+2\theta)=-\sqrt{1-|\Gamma_S|^2} \\ \mathrm{Im}[y_S(\theta)]=\dfrac{2\cdot|\Gamma_S|}{\sqrt{1-|\Gamma_S|^2}} \end{cases}$$

- **Semnul** (+/-) solutiei alese la **prima** ecuatie impune **semnul** solutiei utilizate la a **doua** ecuatie

Calcul analitic, stub paralel (dem.)

- Se prefera (pentru microstrip) stub in gol

$$Z_{in,g} = -j \cdot Z_0 \cdot \cot \beta \cdot l$$

- Susceptanta raportata introdusa pentru adaptare
  - Y(θ) este admitanta vazuta **inspre** sursa, Zo in paralel cu j·B

$$b = \mathrm{Im}\left[\frac{Y_{in,g}}{Y_0}\right] = \mathrm{Im}\left[\frac{Z_0}{Z_{in,g}}\right] = \tan \beta \cdot l = \mathrm{Im}\left[y_S(\theta)\right]$$

$$\boxed{\theta_{sp} = \beta \cdot l = \tan^{-1} \frac{\mp 2 \cdot |\Gamma_S|}{\sqrt{1 - |\Gamma_S|^2}}}$$

Calcul analitic (calcul efectiv)

$$(\varphi+2\theta)=\begin{cases}+126.35^\circ\\-126.35^\circ\end{cases}\quad \theta=\begin{cases}39.7^\circ\\93.4^\circ\end{cases}\quad \mathrm{Im}[y_S(\theta)]=\begin{cases}-1.472\\+1.472\end{cases}\quad \theta_{sp}=\begin{cases}-55.8^\circ+180^\circ=124.2^\circ\\+55.8^\circ\end{cases}$$

- Se alege **una** din cele doua solutii posibile
- **Semnul** (+/-) solutiei alese la **prima** ecuatie impune **semnul** solutiei utilizate la a **doua** ecuatie

$$l_1=\frac{39.7^\circ}{360^\circ}\cdot\lambda=0.110\cdot\lambda$$

$$l_2=\frac{124.2^\circ}{360^\circ}\cdot\lambda=0.345\cdot\lambda$$

$$l_1=\frac{93.4^\circ}{360^\circ}\cdot\lambda=0.259\cdot\lambda$$

$$l_2=\frac{55.8^\circ}{360^\circ}\cdot\lambda=0.155\cdot\lambda$$

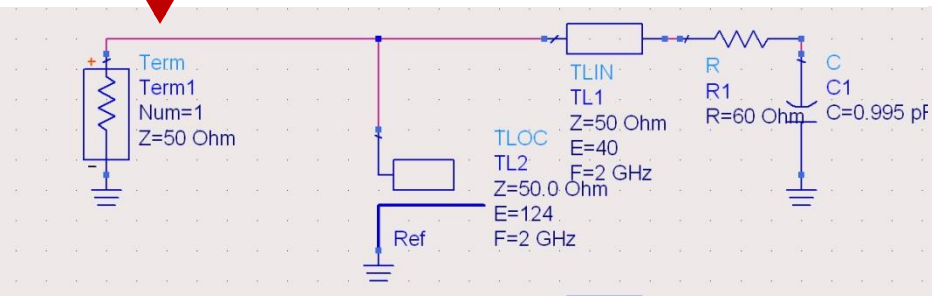

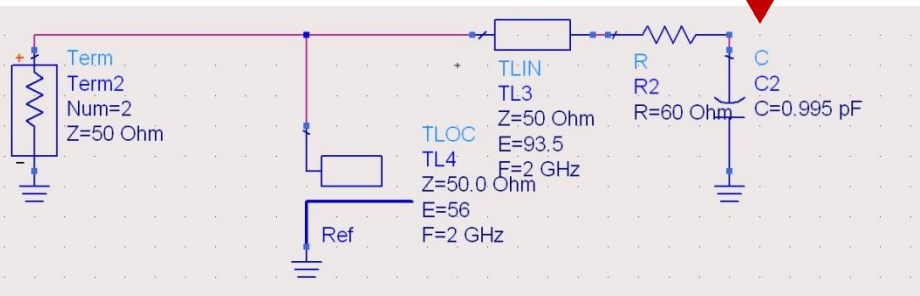

Series Stub

Sectiune de linie serie

Caz 2, Series Stub

- Series Stub (sectiune de linie in serie)
- tehnologic mai dificil de realizat la liniile monofilare (microstrip)

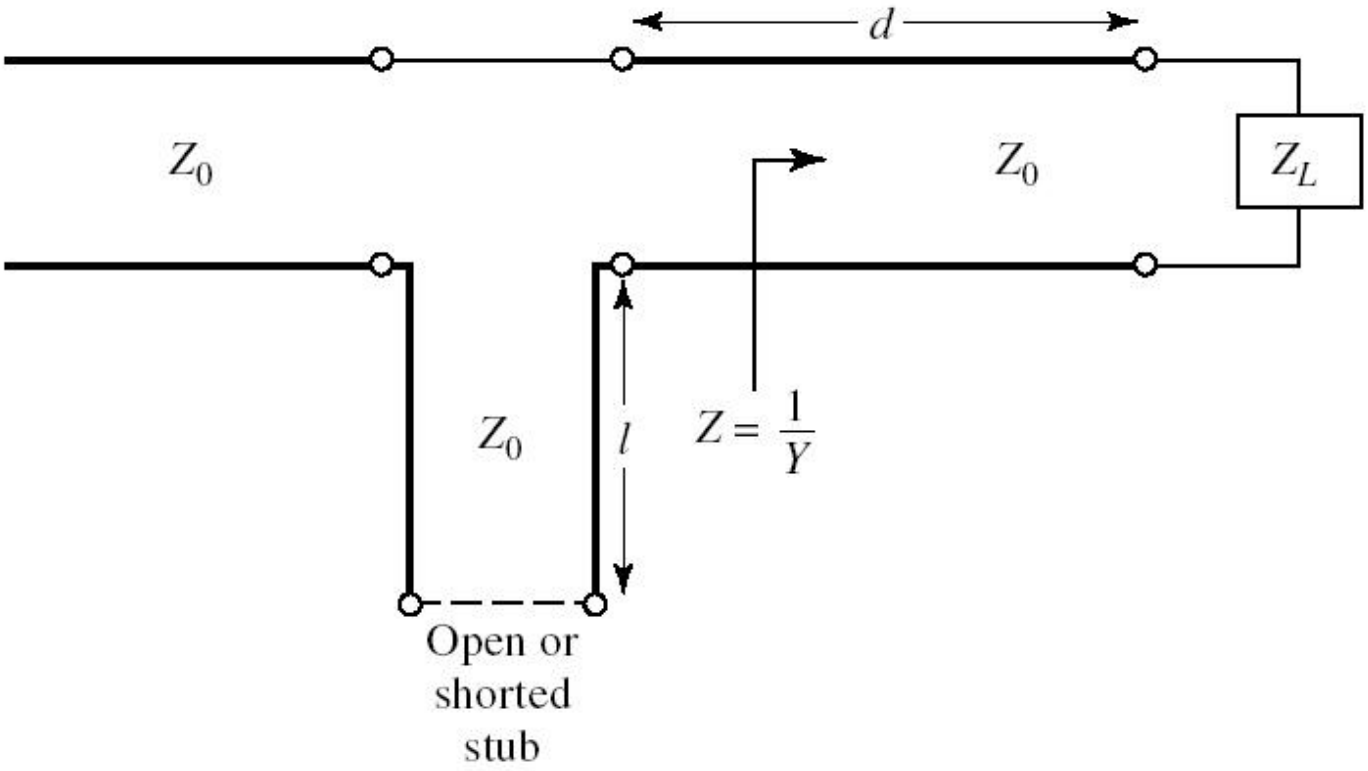

Caz 2, Series Stub

- Se utilizeaza o linie de transmisie serie pentru a muta coeficientul de reflexie pe cercul $r_L = 1$
- Se introduce o reactanta in serie pentru a realiza adaptarea
- Aceasta reactanta se realizeaza cu o linie de transmisie care poate fi dupa nevoie:
  - in gol
  - in scurtcircuit

$$Z_{in} = Z_0 \cdot \frac{Z_L + j \cdot Z_0 \cdot \tan \beta \cdot l}{Z_0 + j \cdot Z_L \cdot \tan \beta \cdot l}$$

$$Z_{in,sc} = j \cdot Z_0 \cdot \tan \beta \cdot l \qquad Z_{in,g} = -j \cdot Z_0 \cdot \cot \beta \cdot l$$

Adaptare, linie serie + reactanta in serie

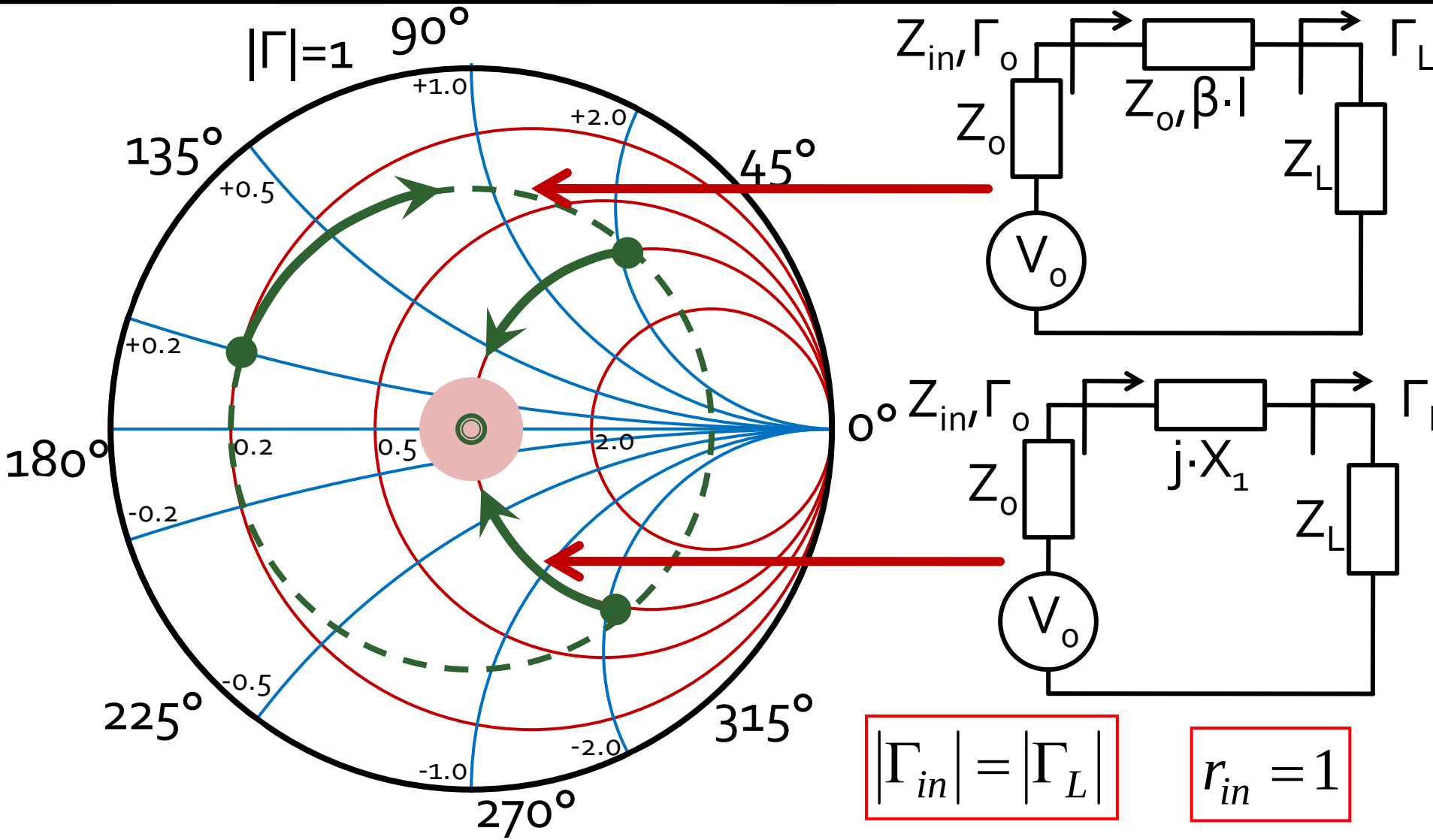

Exemplu, Series Stub, gol

- sarcina: 100 Ω serie 6.37 nH la 2GHz
- doua solutii posibile

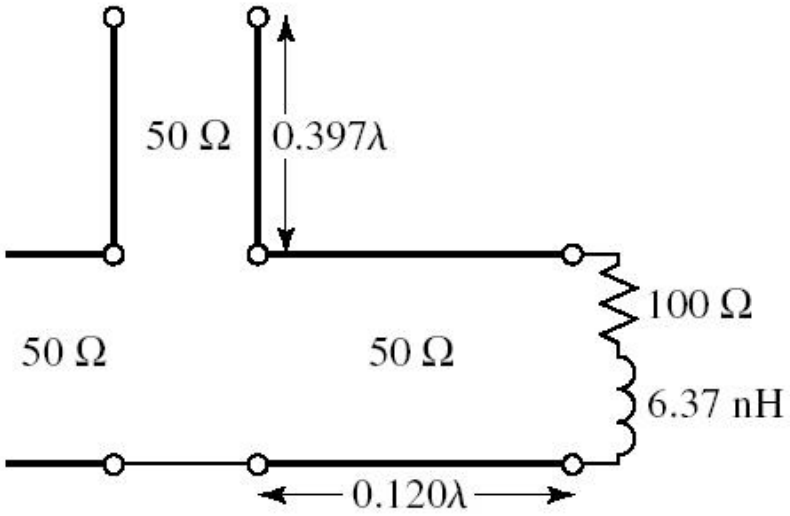

Solution 1

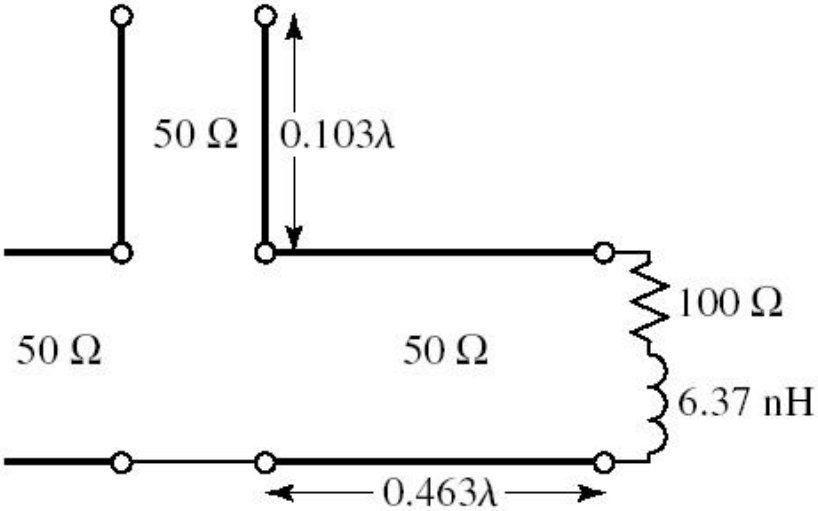

Solution 2

Exemplu, Series Stub, gol

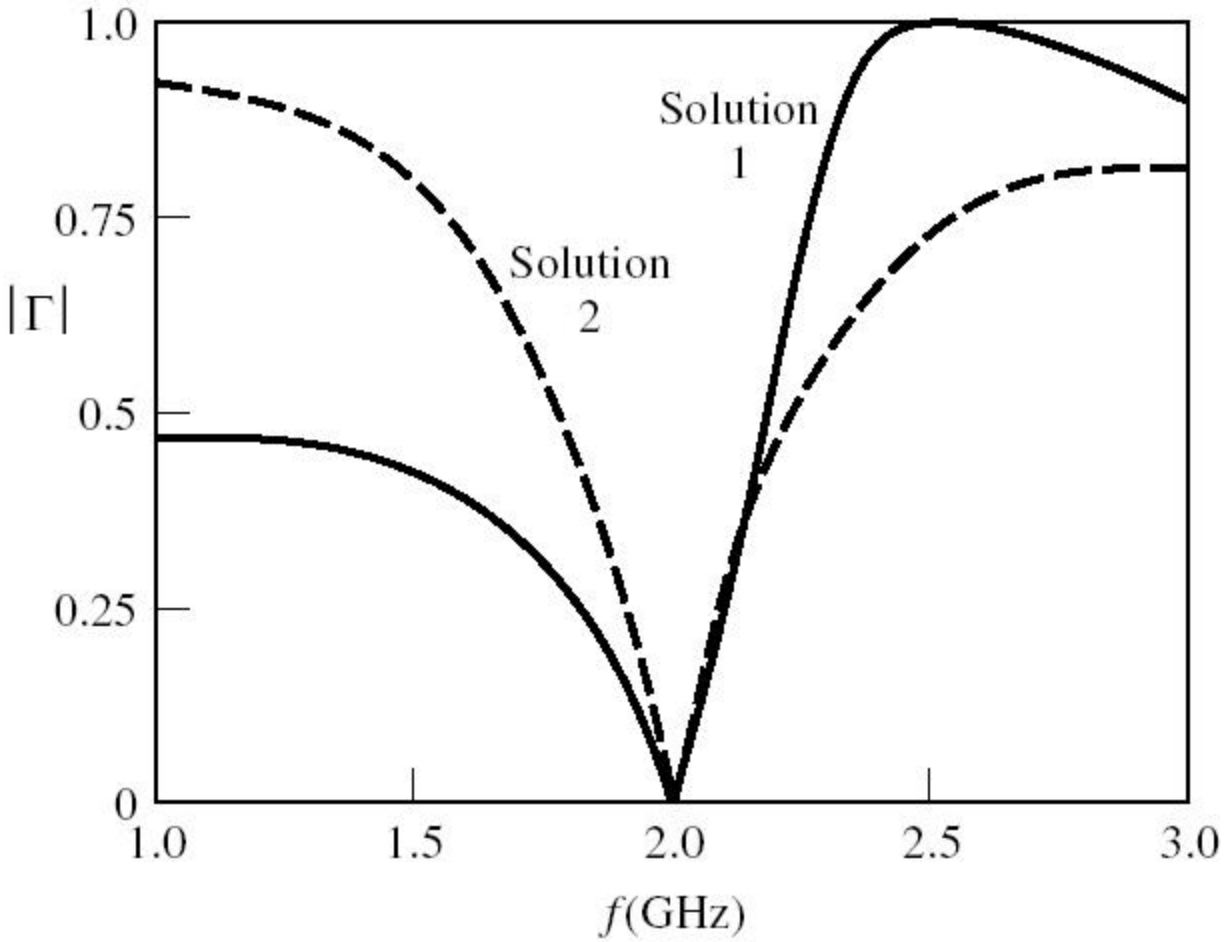

Exemplu, Series Stub, gol

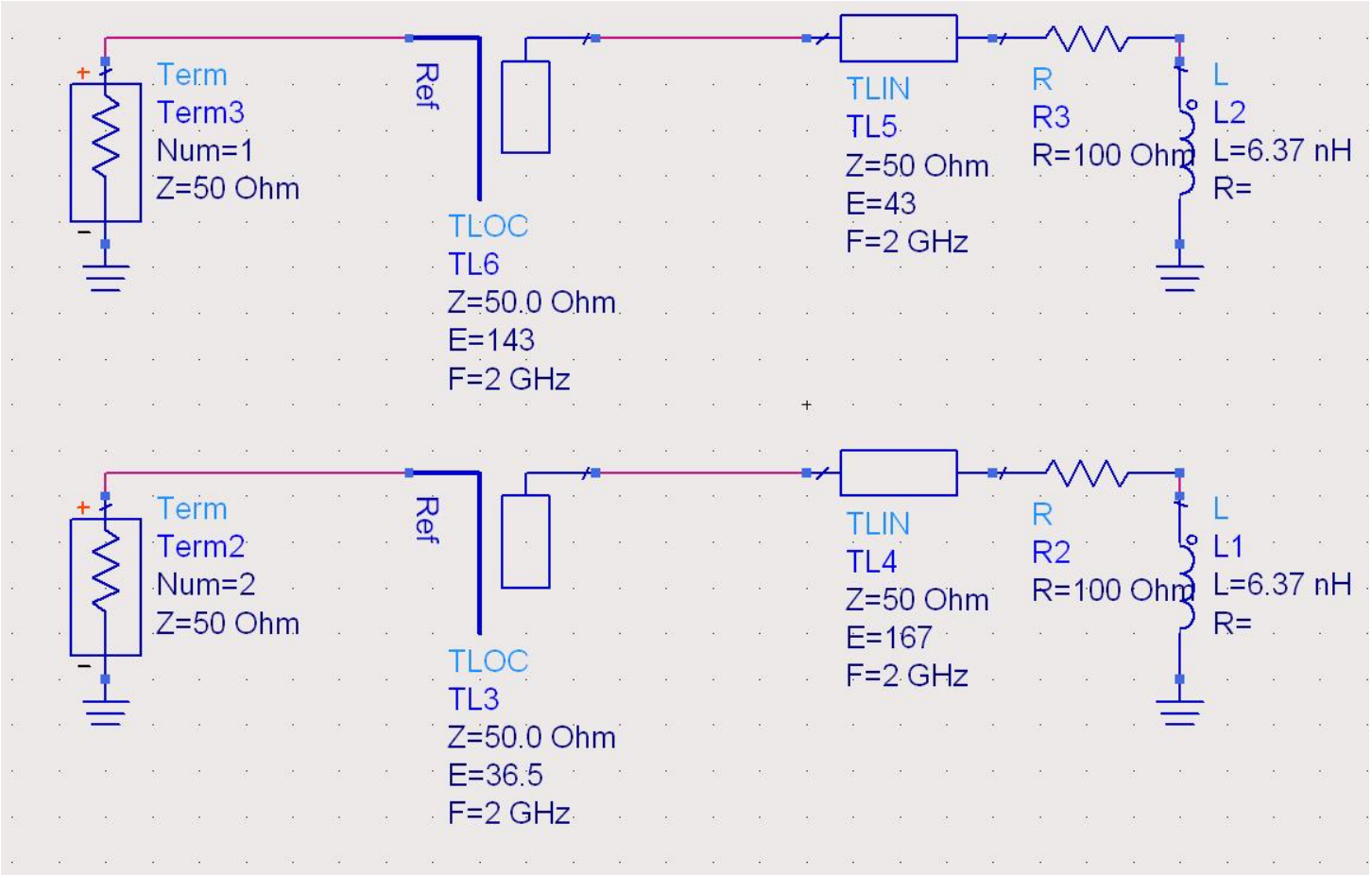

Exemplu, Series Stub, gol

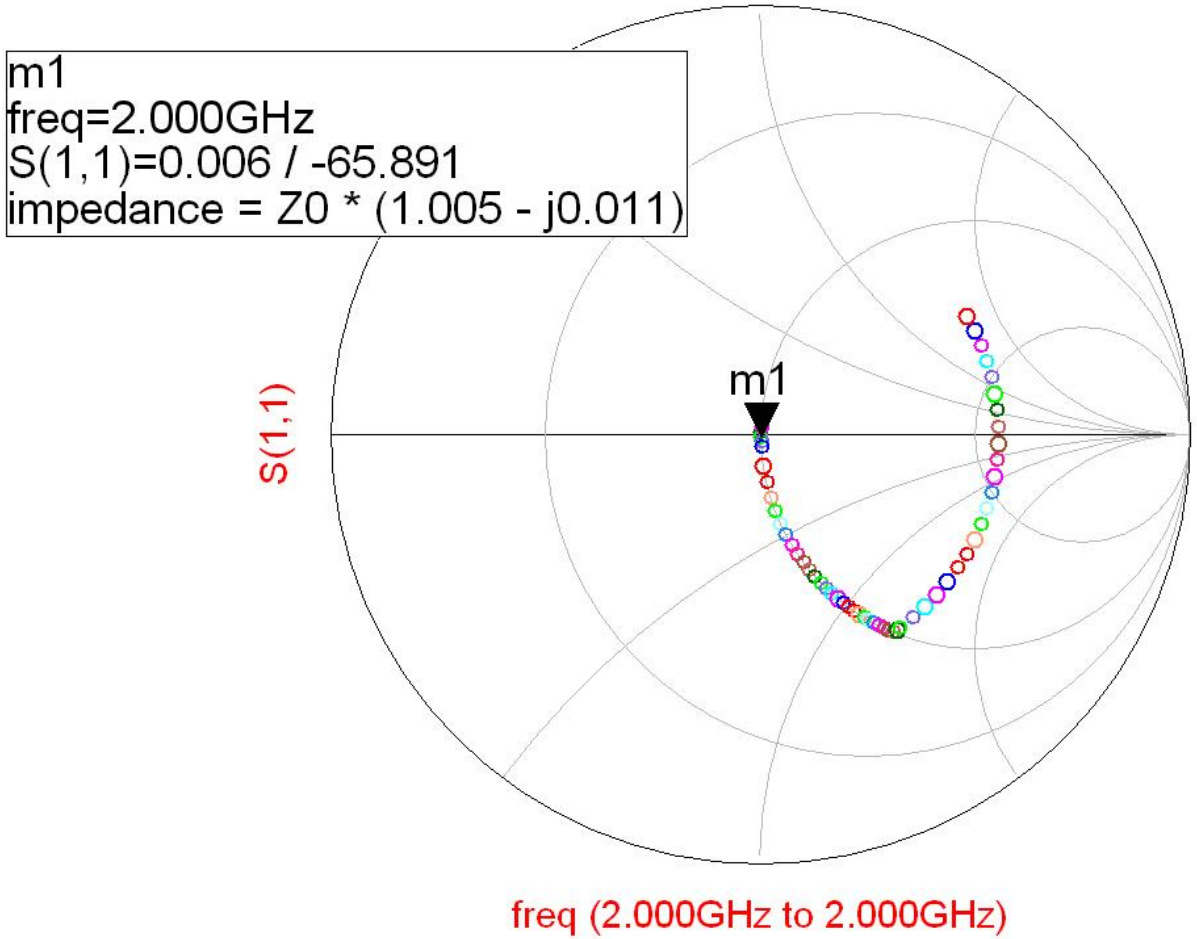

Exemplu, Series Stub, gol

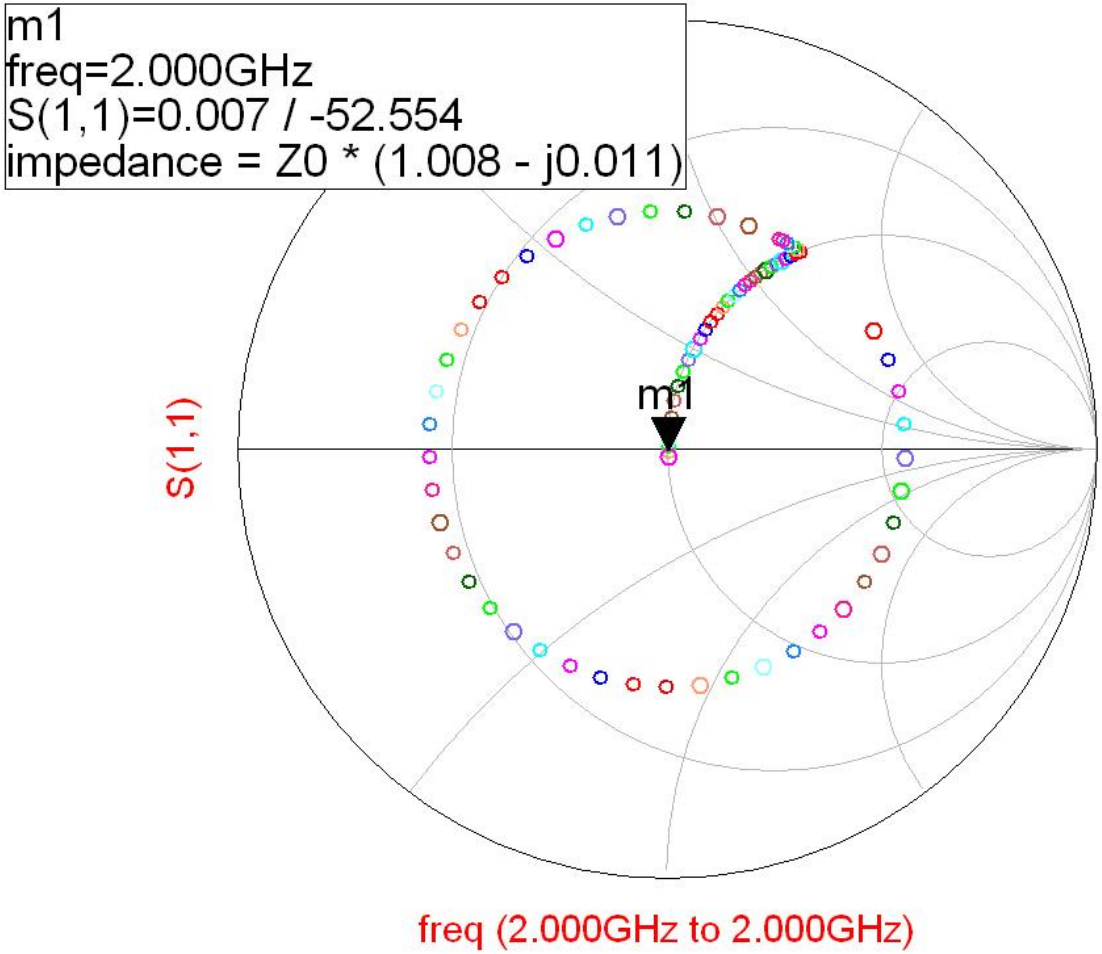

Exemplu, Series Stub, gol

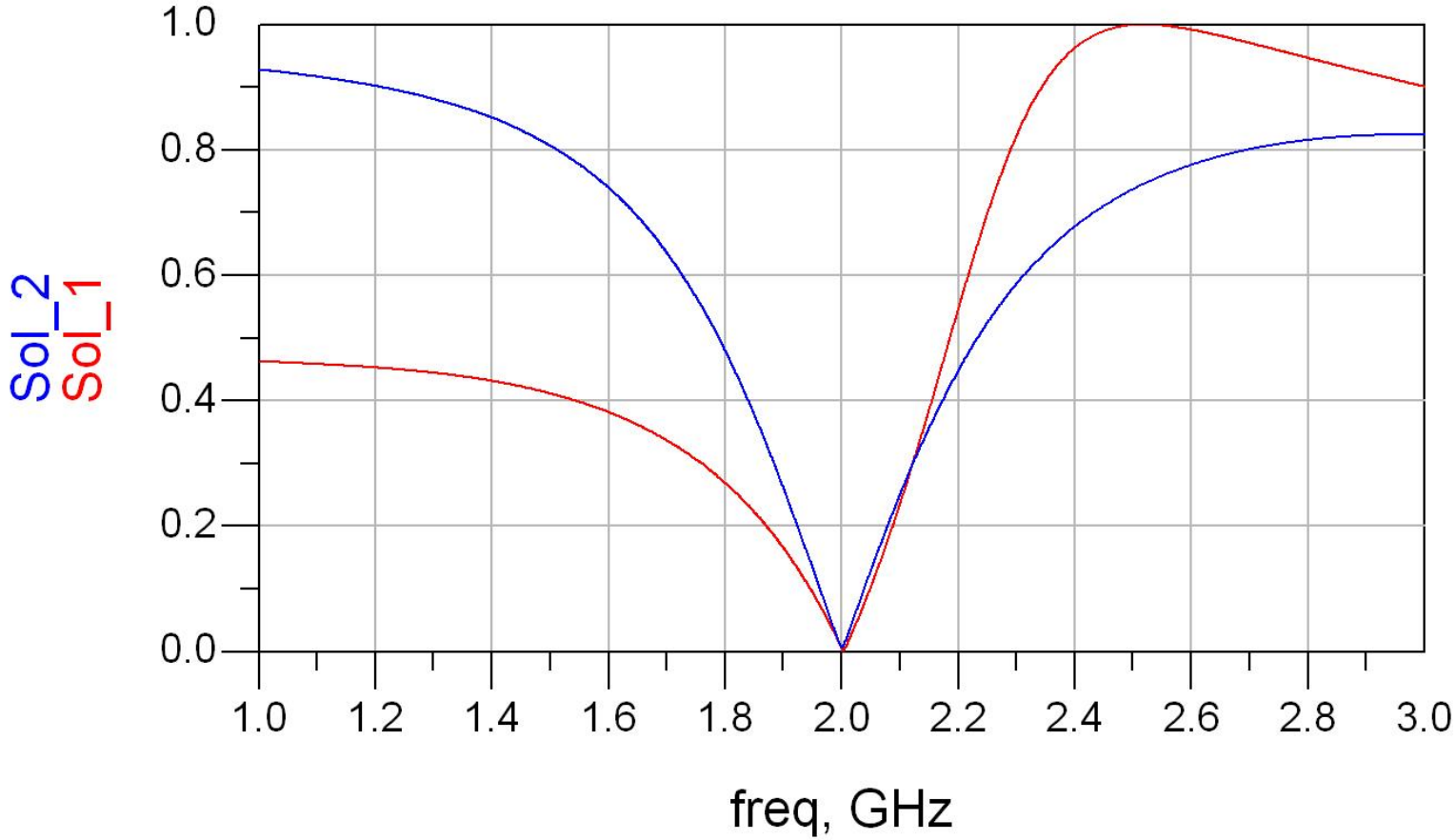

Exemplu, Series Stub, gol

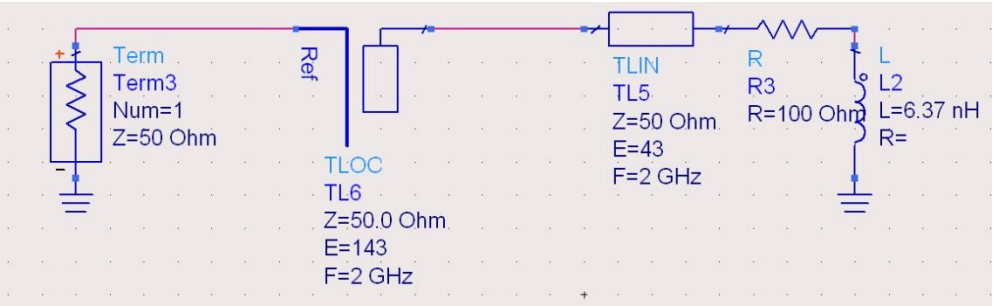

$$l_1 = \frac{43°}{360°} \cdot \lambda = 0.119 \cdot \lambda$$

$$l_2 = \frac{143°}{360°} \cdot \lambda = 0.397 \cdot \lambda$$

$$l_1 = \frac{167°}{360°} \cdot \lambda = 0.464 \cdot \lambda$$

$$l_2 = \frac{36.5°}{360°} \cdot \lambda = 0.101 \cdot \lambda$$

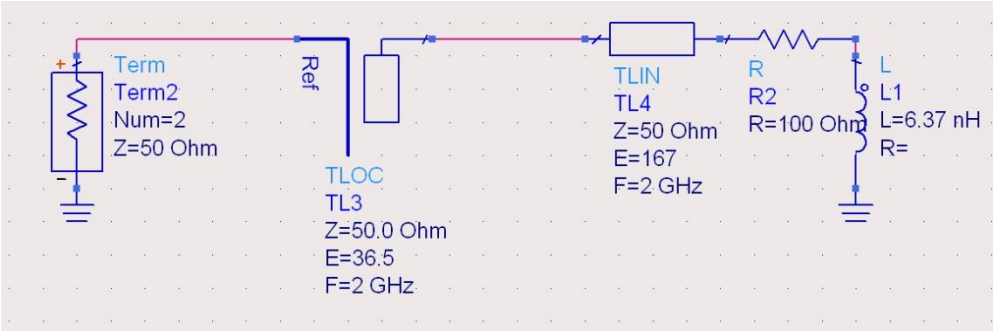

Solutie analitica

Series Stub

Solutie analitica, impedante

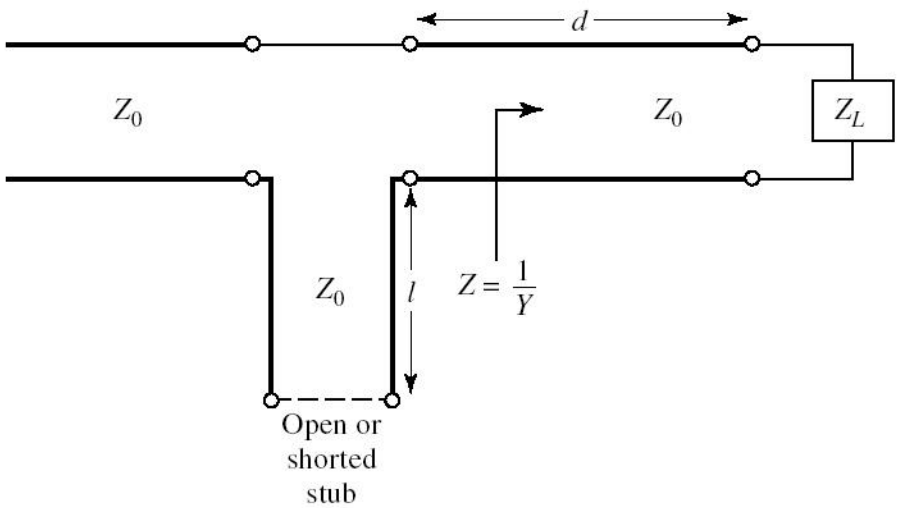

$$Y_L = \frac{1}{Z_L} = G_L + j \cdot B_L$$

$$Y = Y_0 \cdot \frac{(G_L + j \cdot B_L) + j \cdot Y_0 \cdot t}{Y_0 + j \cdot (G_L + j \cdot B_L) \cdot t}$$

$$t \overset{not}{=} \tan \beta \cdot d \qquad Z = R + j \cdot X = \frac{1}{Y}$$

$$R = \frac{G_L \cdot (1 + t^2)}{G_L^2 + (G_L + Y_0 \cdot t)^2} \qquad X = \frac{G_L^2 \cdot t - (Y_0 - B_L \cdot t) \cdot (B_L + Y_0 \cdot t)}{Y_0 \cdot \left[G_L^2 + (B_L + Y_0 \cdot t)^2\right]}$$

- *d* (deci si *t*) este ales astfel incat: $R = Z_0 = \frac{1}{Y_0}$

$$Y_0 \cdot (G_L - Y_0) \cdot t^2 - 2 \cdot B_L \cdot Y_0 \cdot t + (G_L \cdot Y_0 - G_L^2 - B_L^2) = 0$$

Solutie analitica

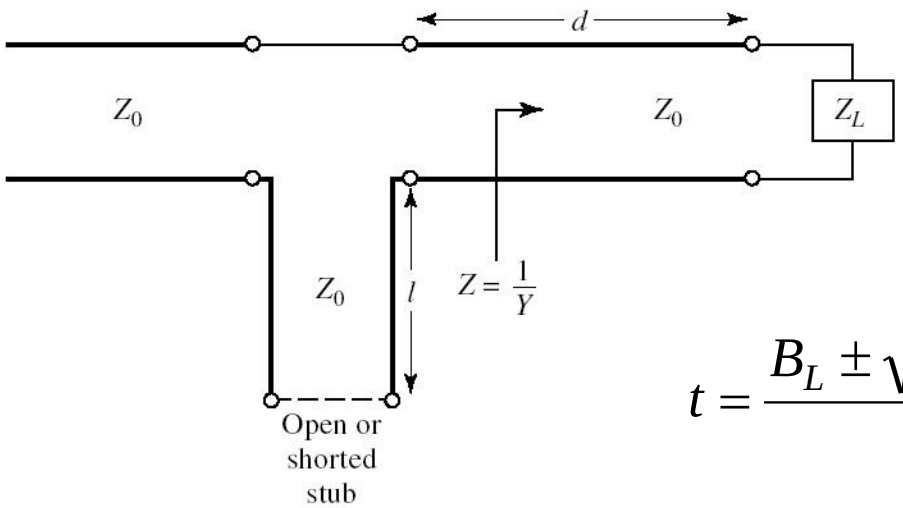

$$t = \frac{-B_L}{2 \cdot Y_0}, \quad G_L = Y_0$$

$$t = \frac{B_L \pm \sqrt{G_L \cdot \left[(Y_0 - G_L)^2 + B_L^2 \right] / Y_0}}{G_L - Y_0} \quad G_L \neq Y_0$$

- ecuatie de gradul 2, 2 solutii posibile
- *d* (din *t* determinat):

$$\frac{d}{\lambda} = \begin{cases} \frac{1}{2\pi} \cdot \arctan t & t \geq 0 \\ \frac{1}{2\pi} \cdot (\pi + \arctan t) & t < 0 \end{cases}$$

Solutie analitica

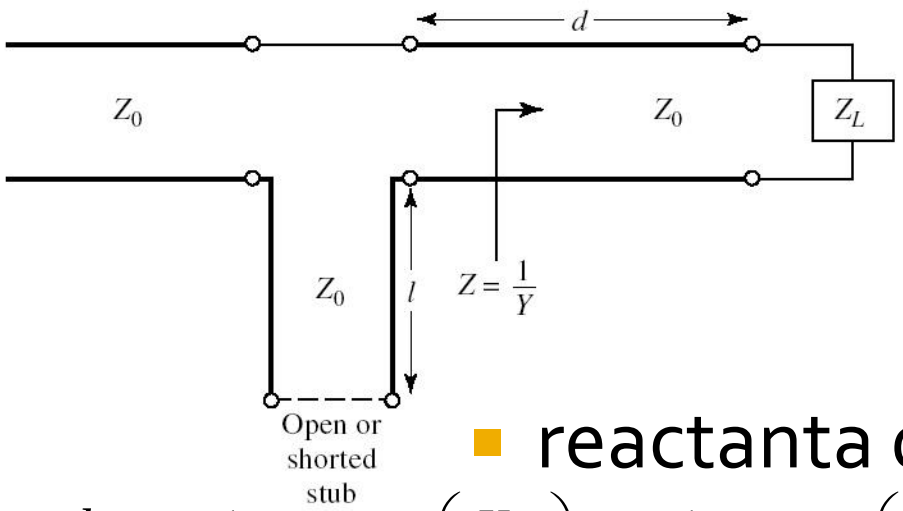

$$X_S = -X$$

$$X = \frac{G_L^2 \cdot t - (Y_0 - B_L \cdot t) \cdot (B_L + Y_0 \cdot t)}{Y_0 \cdot \left[G_L^2 + (B_L + Y_0 \cdot t)^2\right]}$$

- reactanta de anulare se obtine cu:

$$\frac{l_{sc}}{\lambda} = \frac{1}{2\pi} \cdot \arctan\left(\frac{X_S}{Z_0}\right) = \frac{-1}{2\pi} \cdot \arctan\left(\frac{X}{Z_0}\right)$$

$$\frac{l_{gol}}{\lambda} = \frac{-1}{2\pi} \cdot \arctan\left(\frac{Z_0}{X_S}\right) = \frac{1}{2\pi} \cdot \arctan\left(\frac{Z_0}{X}\right)$$

- pentru **lungimi negative** se adauga λ/2

Calcul analitic, coeficienti de reflexie

- sarcina: 100 Ω serie 6.37 nH la 2GHz

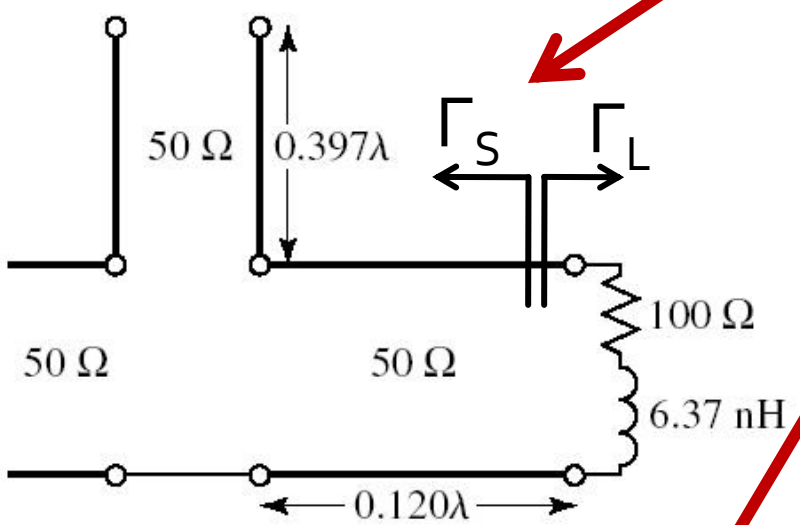

Solution 1

$$Z_L = R_L + \frac{1}{j \cdot \omega \cdot C_L} = 100\Omega + j \cdot 80.05\Omega$$

$$\Gamma_L = \frac{Z_L - Z_0}{Z_L + Z_0} = 0.481 + j \cdot 0.277$$

$$z_L = \frac{Z_L}{Z_0} = 2 + j \cdot 1.6$$

- adaptare necesita Γ complex conjugat

$$\Gamma_S = \Gamma_L^* = 0.481 - j \cdot 0.277$$

$$\Gamma_S = 0.555\angle -29.92^\circ \qquad |\Gamma_S| = 0.555; \quad \varphi = -29.92^\circ$$

Calcul analitic, coeficienti de reflexie

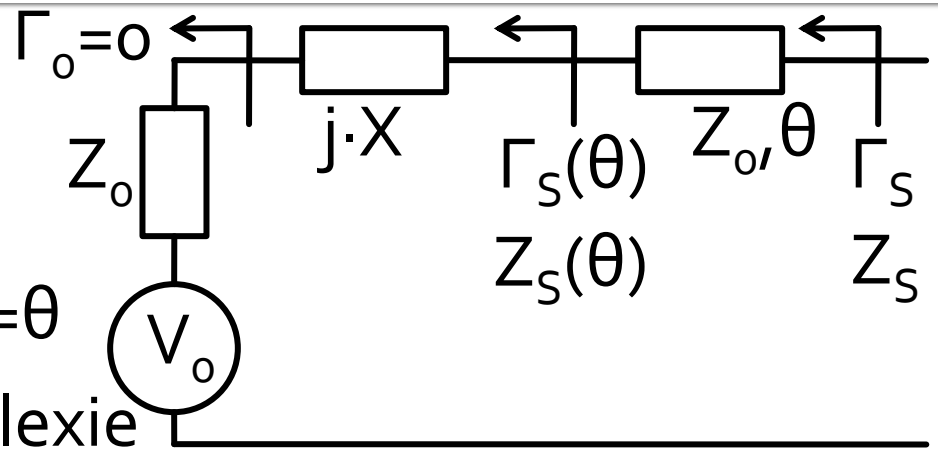

- linie serie
  - lungime electrica E= β·l=θ
  - muta coeficientul de reflexie pe cercul r=1
- stub serie
  - lungime electrica E= $\beta \cdot l_{ss} = \theta_{ss}$
  - muta coeficientul de reflexie in centrul diagramei Smith (Γ_o=0)

$$z_S = \frac{Z_S}{Z_0} = \frac{Z_S}{50\Omega}$$

$$z_S = \frac{1+\Gamma_S}{1-\Gamma_S} = 2 - j \cdot 1.6$$

$$\Gamma_S(\theta) = \Gamma_S \cdot e^{2j\theta}$$

$$z_S(\theta) = \frac{1+\Gamma_S(\theta)}{1-\Gamma_S(\theta)} = \frac{1+\Gamma_S \cdot e^{2j\theta}}{1-\Gamma_S \cdot e^{2j\theta}}$$

Calcul analitic, linie serie (dem.)

- Dupa sectiunea de linie cu lungimea electrica θ:

$$\mathrm{Re}\left[z_S(\theta)\right] = 1 \qquad \mathrm{Im}\left[z_S(\theta)\right] = X$$

$$\mathrm{Re}\left[z_S(\theta)\right] = \frac{1}{2}\cdot\left[z_S(\theta) + z_S^*(\theta)\right] \qquad \mathrm{Im}\left[z_S(\theta)\right] = \frac{1}{2j}\cdot\left[z_S(\theta) - z_S^*(\theta)\right]$$

$$\mathrm{Re}\left[z_S(\theta)\right] = \frac{1}{2}\cdot\left[\frac{1+\Gamma_S\cdot e^{2j\theta}}{1-\Gamma_S\cdot e^{2j\theta}} + \frac{1+\Gamma_S^*\cdot e^{-2j\theta}}{1-\Gamma_S^*\cdot e^{-2j\theta}}\right] \qquad \Gamma_S = \left|\Gamma_S\right|\cdot e^{j\varphi}$$

$$\mathrm{Re}\left[z_S(\theta)\right] = \frac{1}{2}\cdot\left[\frac{\left(1+\left|\Gamma_S\right|\cdot e^{j\cdot(\varphi+2\theta)}\right)\cdot\left(1-\left|\Gamma_S\right|\cdot e^{-j\cdot(\varphi+2\theta)}\right)+\left(1+\left|\Gamma_S\right|\cdot e^{-j\cdot(\varphi+2\theta)}\right)\cdot\left(1-\left|\Gamma_S\right|\cdot e^{j\cdot(\varphi+2\theta)}\right)}{\left(1-\left|\Gamma_S\right|\cdot e^{-j\cdot(\varphi+2\theta)}\right)\cdot\left(1-\left|\Gamma_S\right|\cdot e^{j\cdot(\varphi+2\theta)}\right)}\right]$$

$$\mathrm{Re}\left[z_S(\theta)\right] = \frac{1}{2}\cdot\left[\frac{2-2\cdot\left|\Gamma_S\right|^2}{1+\left|\Gamma_S\right|^2-2\cdot\left|\Gamma_S\right|\cdot\cos(\varphi+2\theta)}\right] = 1 \quad\Rightarrow\quad \boxed{\cos(\varphi+2\theta) = \left|\Gamma_S\right|}$$

Calcul analitic, linie serie (calcul)

- Ecuatia pentru calcularea θ (linie serie)

$$\mathrm{Re}\left[z_S(\theta)\right] = 1 \Rightarrow \qquad \cos(\varphi + 2\theta) = |\Gamma_S|$$

$$\Gamma_S = |\Gamma_S| \cdot e^{j\varphi} \qquad \Gamma_S = 0.555\angle -29.92^\circ \qquad |\Gamma_S| = 0.555; \quad \varphi = -29.92^\circ$$

- doua solutii posibile, normate la intervalul 0÷180°
  - se adauga λ/2 (180°) dupa nevoie

$$\theta = \frac{1}{2} \cdot \left[\pm \cos^{-1}(|\Gamma_S|) - \varphi + k \cdot 360^\circ\right] = \frac{1}{2} \cdot \left[\pm \cos^{-1}(|\Gamma_S|) - \varphi\right] + k \cdot 180^\circ$$

$$\forall k \in N$$

$$\cos(\varphi + 2\theta) = 0.555 \Rightarrow \qquad (\varphi + 2\theta) = \pm 56.28^\circ$$

$$(-29.92^\circ + 2\theta) = \begin{cases} +56.28^\circ \\ -56.28^\circ \end{cases} \qquad \theta = \begin{cases} +43.1^\circ \\ -13.2^\circ + 180^\circ = +166.8^\circ \end{cases}$$

Calcul analitic, stub serie (dem.)

- Ecuatia pentru calcularea stub-ului serie θ_{ss}:

$$\mathrm{Re}\left[z_S(\theta)\right] = 1 \qquad \cos(\varphi + 2\theta) = |\Gamma_S|$$

$$\mathrm{Im}\left[z_S(\theta)\right] = \frac{1}{2j} \cdot \left[\frac{1 + \Gamma_S \cdot e^{2j\theta}}{1 - \Gamma_S \cdot e^{2j\theta}} - \frac{1 + \Gamma_S^* \cdot e^{-2j\theta}}{1 - \Gamma_S^* \cdot e^{-2j\theta}} \right] \qquad \Gamma_S = |\Gamma_S| \cdot e^{j\varphi}$$

$$\mathrm{Im}\left[z_S(\theta)\right] = \frac{1}{2j} \cdot \left[\frac{\left(1 + |\Gamma_S| \cdot e^{j\cdot(\varphi+2\theta)}\right) \cdot \left(1 - |\Gamma_S| \cdot e^{-j\cdot(\varphi+2\theta)}\right) - \left(1 + |\Gamma_S| \cdot e^{-j\cdot(\varphi+2\theta)}\right) \cdot \left(1 - |\Gamma_S| \cdot e^{j\cdot(\varphi+2\theta)}\right)}{\left(1 - |\Gamma_S| \cdot e^{-j\cdot(\varphi+2\theta)}\right) \cdot \left(1 - |\Gamma_S| \cdot e^{j\cdot(\varphi+2\theta)}\right)} \right]$$

$$\mathrm{Im}\left[z_S(\theta)\right] = \frac{1}{2j} \cdot \left[\frac{2 \cdot |\Gamma_S| \cdot e^{+j\cdot(\varphi+2\theta)} - 2 \cdot |\Gamma_S| \cdot e^{-j\cdot(\varphi+2\theta)}}{1 + |\Gamma_S|^2 - 2 \cdot |\Gamma_S| \cdot \cos(\varphi + 2\theta)} \right] = \frac{2 \cdot |\Gamma_S| \cdot \sin(\varphi + 2\theta)}{1 + |\Gamma_S|^2 - 2 \cdot |\Gamma_S| \cdot \cos(\varphi + 2\theta)}$$

$$\cos(\varphi + 2\theta) = |\Gamma_S| \Rightarrow \qquad \mathrm{Im}\left[z_S(\theta)\right] = \frac{2 \cdot |\Gamma_S| \cdot \sin(\varphi + 2\theta)}{1 - |\Gamma_S|^2}$$

Calcul analitic, stub serie (dem.)

- Ecuatia pentru calcularea stub-ului serie θ_{ss}:

$$\cos(\varphi+2\theta)=|\Gamma_S| \Rightarrow \qquad \sin(\varphi+2\theta)=\pm\sqrt{1-|\Gamma_S|^2}$$

$$\mathrm{Im}[z_S(\theta)]=\frac{2\cdot|\Gamma_S|\cdot\sin(\varphi+2\theta)}{1-|\Gamma_S|^2} \Rightarrow \qquad \mathrm{Im}[z_S(\theta)]=\frac{\pm 2\cdot|\Gamma_S|}{\sqrt{1-|\Gamma_S|^2}}$$

- doua situatii

$$\varphi+2\theta\in[0°,180°] \Rightarrow \sin(\varphi+2\theta)\geq 0 \qquad \begin{cases} \sin(\varphi+2\theta)=\sqrt{1-|\Gamma_S|^2} \\ \mathrm{Im}[z_S(\theta)]=\dfrac{+2\cdot|\Gamma_S|}{\sqrt{1-|\Gamma_S|^2}} \end{cases}$$

$$\varphi+2\theta\in(-180°,0°) \Rightarrow \sin(\varphi+2\theta)<0 \qquad \begin{cases} \sin(\varphi+2\theta)=-\sqrt{1-|\Gamma_S|^2} \\ \mathrm{Im}[z_S(\theta)]=\dfrac{-2\cdot|\Gamma_S|}{\sqrt{1-|\Gamma_S|^2}} \end{cases}$$

- **Semnul** (+/-) solutiei alese la **prima** ecuatie impune **semnul** solutiei utilizate la a **doua** ecuatie

Calcul analitic, stub serie (dem.)

- Se prefera (pentru microstrip) stub in gol

$$Z_{in,oc} = -j \cdot Z_0 \cdot \cot \beta \cdot l$$

- Reactanta raportata introdusa pentru adaptare
  - Z(θ) este impedanta vazuta **inspre** sursa, Zo in serie cu j·X

$$x = \mathrm{Im}\left[\frac{Z_{in,oc}}{Z_0}\right] = -\cot \beta \cdot l = \mathrm{Im}\left[z_S(\theta)\right]$$

$$\boxed{\theta_{ss} = \beta \cdot l = \cot^{-1} \frac{\mp 2 \cdot |\Gamma_S|}{\sqrt{1 - |\Gamma_S|^2}}}$$

Calcul analitic (calcul efectiv)

$$(\varphi+2\theta)=\begin{cases}+56.28^\circ\\-56.28^\circ\end{cases}\quad \theta=\begin{cases}43.1^\circ\\166.8^\circ\end{cases}\quad \mathrm{Im}[z_S(\theta)]=\begin{cases}+1.335\\-1.335\end{cases}\quad \theta_{ss}=\begin{cases}-36.8^\circ+180^\circ=143.2^\circ\\+36.8^\circ\end{cases}$$

- Se alege **una** din cele doua solutii posibile
- **Semnul** (+/-) solutiei alese la **prima** ecuatie impune **semnul** solutiei utilizate la a **doua** ecuatie

$$l_1=\frac{43.1^\circ}{360^\circ}\cdot\lambda=0.120\cdot\lambda$$

$$l_2=\frac{143.2^\circ}{360^\circ}\cdot\lambda=0.398\cdot\lambda$$

$$l_1=\frac{166.8^\circ}{360^\circ}\cdot\lambda=0.463\cdot\lambda$$

$$l_2=\frac{36.8^\circ}{360^\circ}\cdot\lambda=0.102\cdot\lambda$$

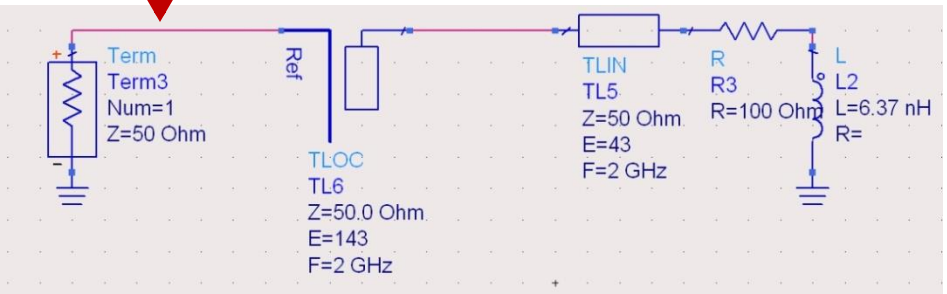

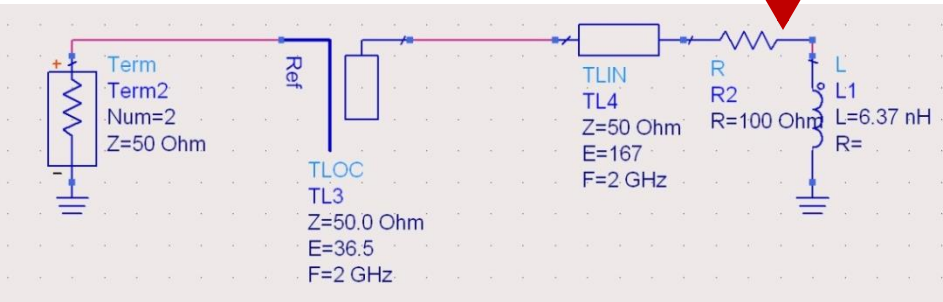

Adaptarea cu sectiuni de linii (stub)

- Se alege una din cele 8 solutii posibile convenabila tinand cont de:
  - dimensiuni fizice (suprafata ocupata pe chip/placa)
  - sensibilitatea adaptarii la variatia parametrilor fizici ai liniilor ($\Delta\Gamma/\Delta E$, $\Delta\Gamma/\Delta l$)
  - caracteristica de frecventa convenabila

Adaptarea cu sectiuni de linii (stub)

- Se alege una din cele 8 solutii posibile convenabila tinand cont de:
  - realizabilitate fizica (conform tehnologiei de linie utilizata)

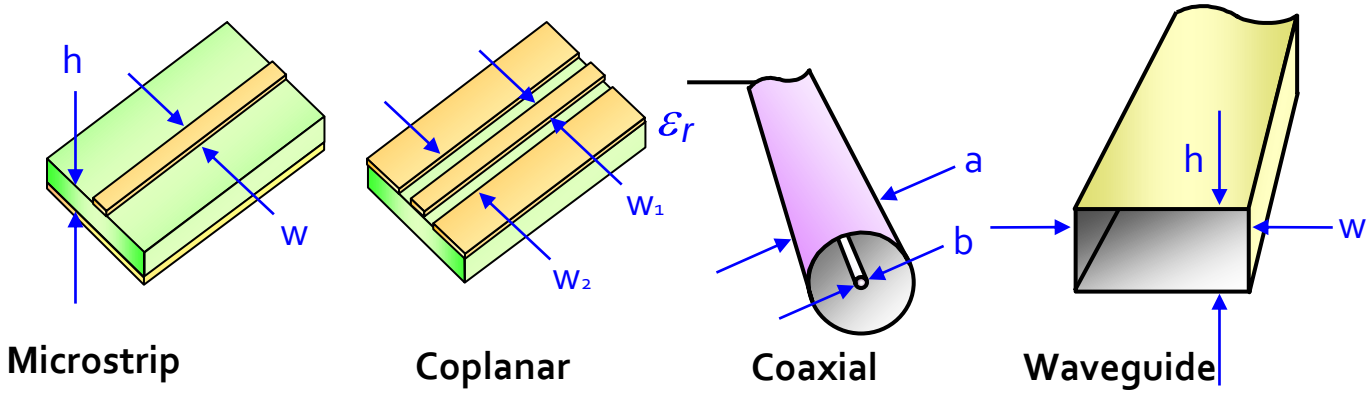

- Dezavantaj:
  - lungimea sectiunii de linie serie e variabila

Solutii analitice

Examen / Proiect

Caz 1, Shunt Stub

- Shunt Stub (sectiune de linie in paralel)

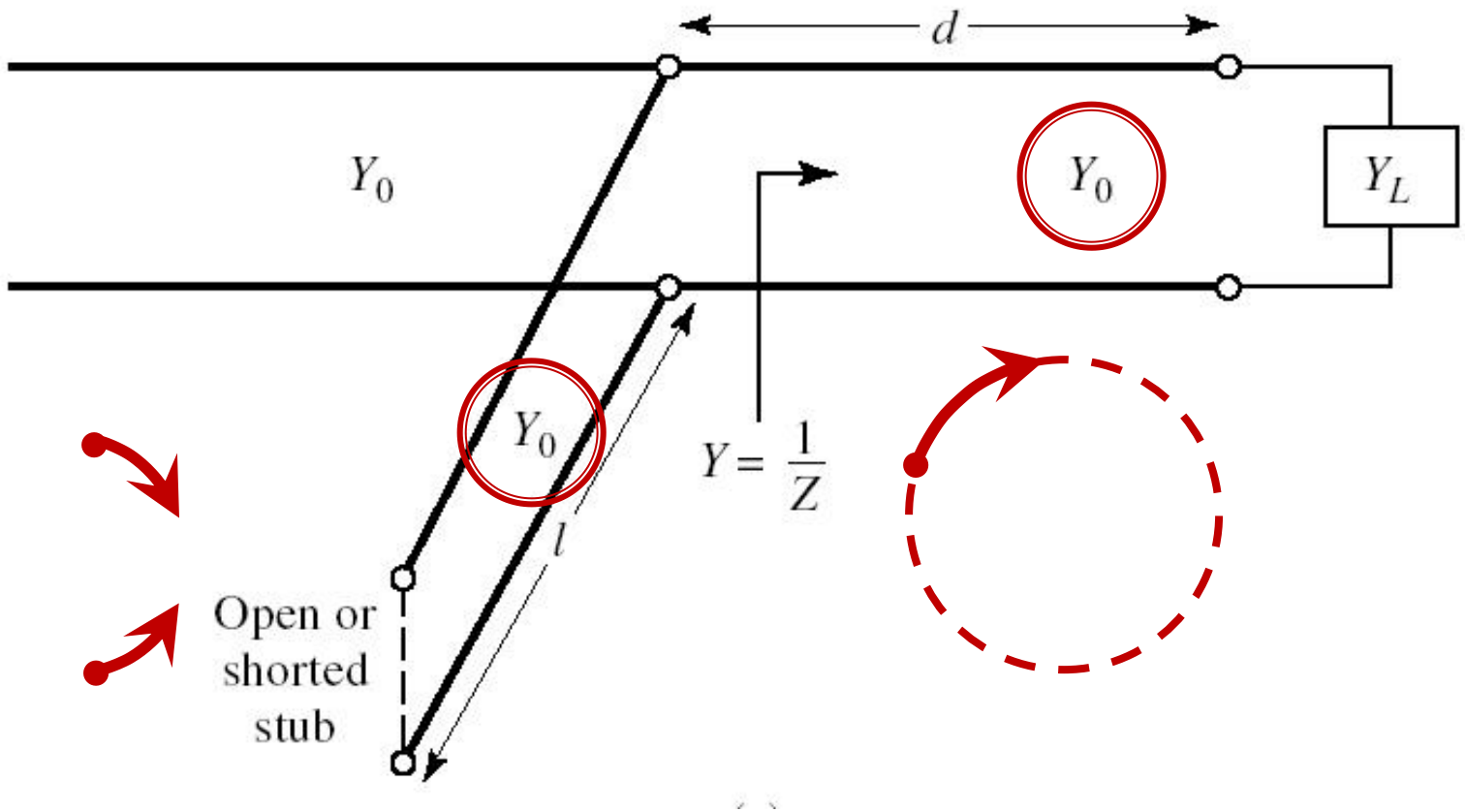

Adaptare, linie serie + susceptanta in paralel

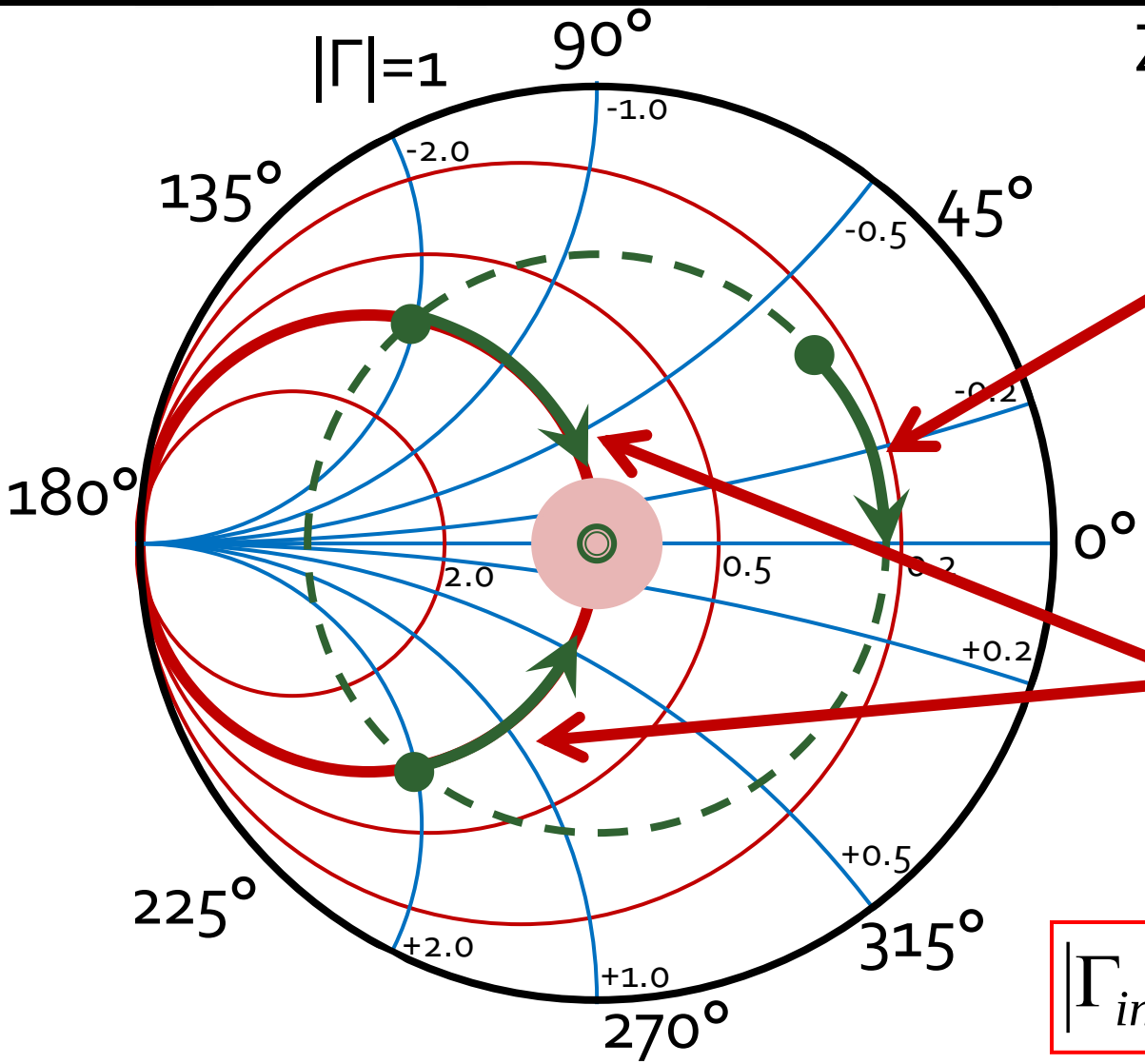

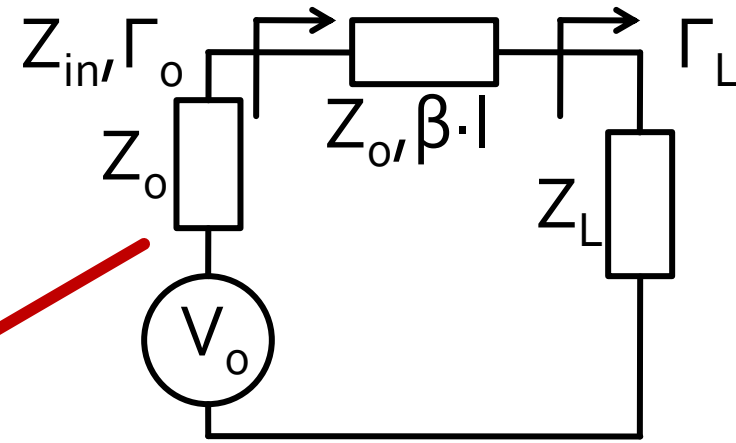

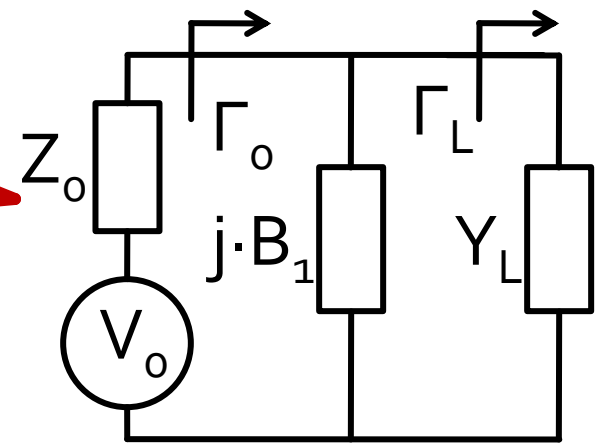

$$\boxed{|\Gamma_{in}| = |\Gamma_L|}$$

$$\boxed{g_{in} = 1}$$

Calcul analitic (calcul efectiv)

$$\boxed{\cos(\varphi + 2\theta) = -|\Gamma_S|}$$

$$\boxed{\theta_{sp} = \beta \cdot l = \tan^{-1} \frac{\mp 2 \cdot |\Gamma_S|}{\sqrt{1 - |\Gamma_S|^2}}}$$

$$\Gamma_S = 0.593 \angle 46.85°$$

$$|\Gamma_S| = 0.593; \quad \varphi = 46.85° \qquad \cos(\varphi + 2\theta) = -0.593 \Rightarrow \quad (\varphi + 2\theta) = \pm 126.35°$$

- **Semnul** (+/-) solutiei alese la ecuatia **liniei serie** impune **semnul** solutiei utilizate la ecuatia **stub-ului paralel**
  - **solutia "cu +"**

    $$(46.85° + 2\theta) = +126.35° \qquad \theta = +39.7° \qquad \operatorname{Im} y_S = \frac{-2 \cdot |\Gamma_S|}{\sqrt{1 - |\Gamma_S|^2}} = -1.472$$

    $$\theta_{sp} = \tan^{-1}(\operatorname{Im} y_S) = -55.8° \underline{(+180°)} \rightarrow \theta_{sp} = 124.2°$$

  - **solutia "cu -"**

    $$(46.85° + 2\theta) = -126.35° \qquad \theta = -86.6° \underline{(+180°)} \rightarrow \theta = 93.4°$$

    $$\operatorname{Im} y_S = \frac{+2 \cdot |\Gamma_S|}{\sqrt{1 - |\Gamma_S|^2}} = +1.472 \qquad \theta_{sp} = \tan^{-1}(\operatorname{Im} y_S) = 55.8°$$

Calcul analitic (calcul efectiv)

$$(\varphi+2\theta)=\begin{cases}+126.35^\circ\\-126.35^\circ\end{cases}\quad \theta=\begin{cases}39.7^\circ\\93.4^\circ\end{cases}\quad \mathrm{Im}[y_S(\theta)]=\begin{cases}-1.472\\+1.472\end{cases}\quad \theta_{sp}=\begin{cases}-55.8^\circ+180^\circ=124.2^\circ\\+55.8^\circ\end{cases}$$

- Se alege **una** din cele doua solutii posibile
- **Semnul** (+/-) solutiei alese la **prima** ecuatie impune **semnul** solutiei utilizate la a **doua** ecuatie

$$l_1=\frac{39.7^\circ}{360^\circ}\cdot\lambda=0.110\cdot\lambda$$

$$l_2=\frac{124.2^\circ}{360^\circ}\cdot\lambda=0.345\cdot\lambda$$

$$l_1=\frac{93.4^\circ}{360^\circ}\cdot\lambda=0.259\cdot\lambda$$

$$l_2=\frac{55.8^\circ}{360^\circ}\cdot\lambda=0.155\cdot\lambda$$

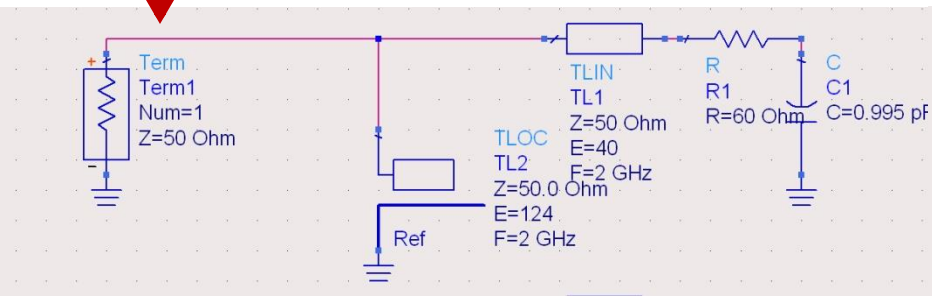

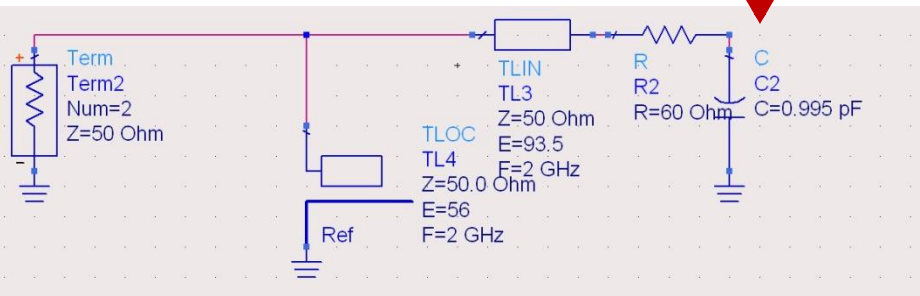

Caz 2, Series Stub

- Series Stub (sectiune de linie in serie)
- tehnologic mai dificil de realizat la liniile monofilare (microstrip)

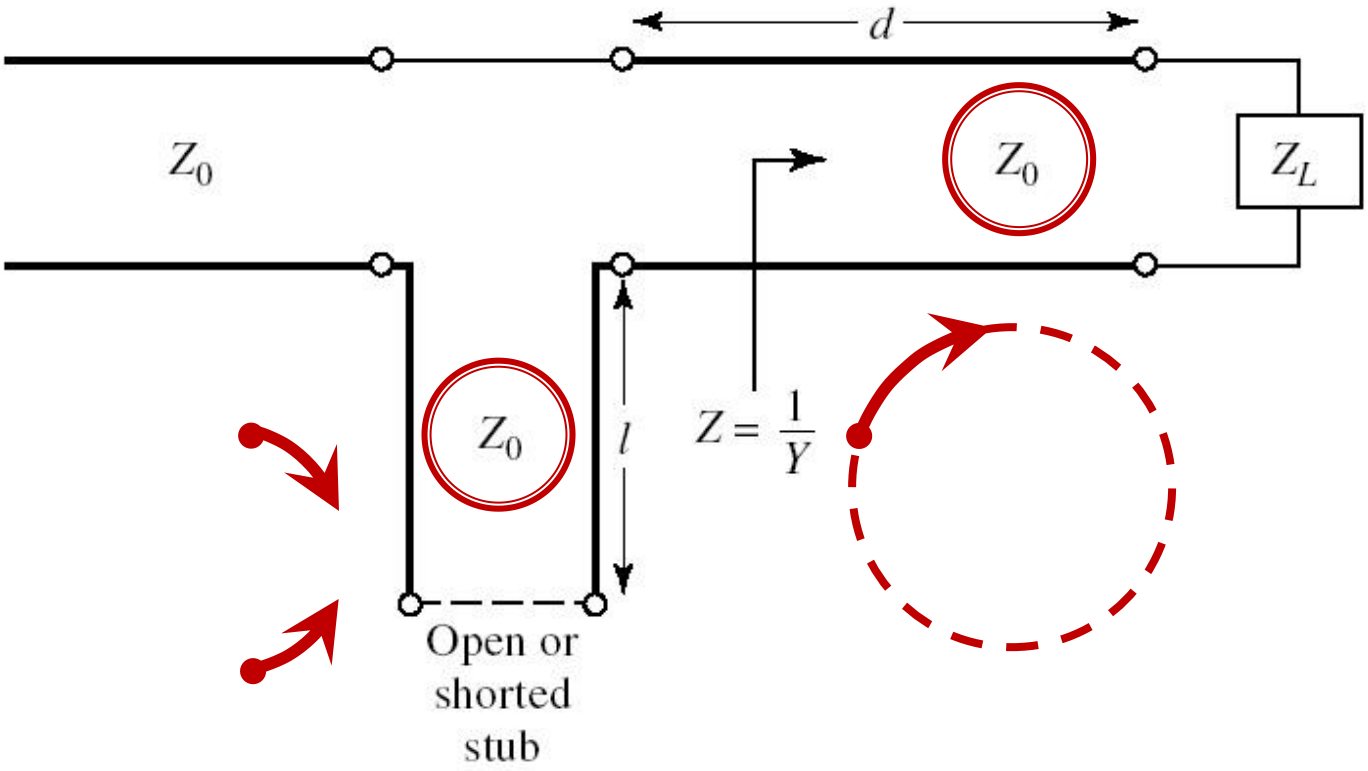

Adaptare, linie serie + reactanta in serie

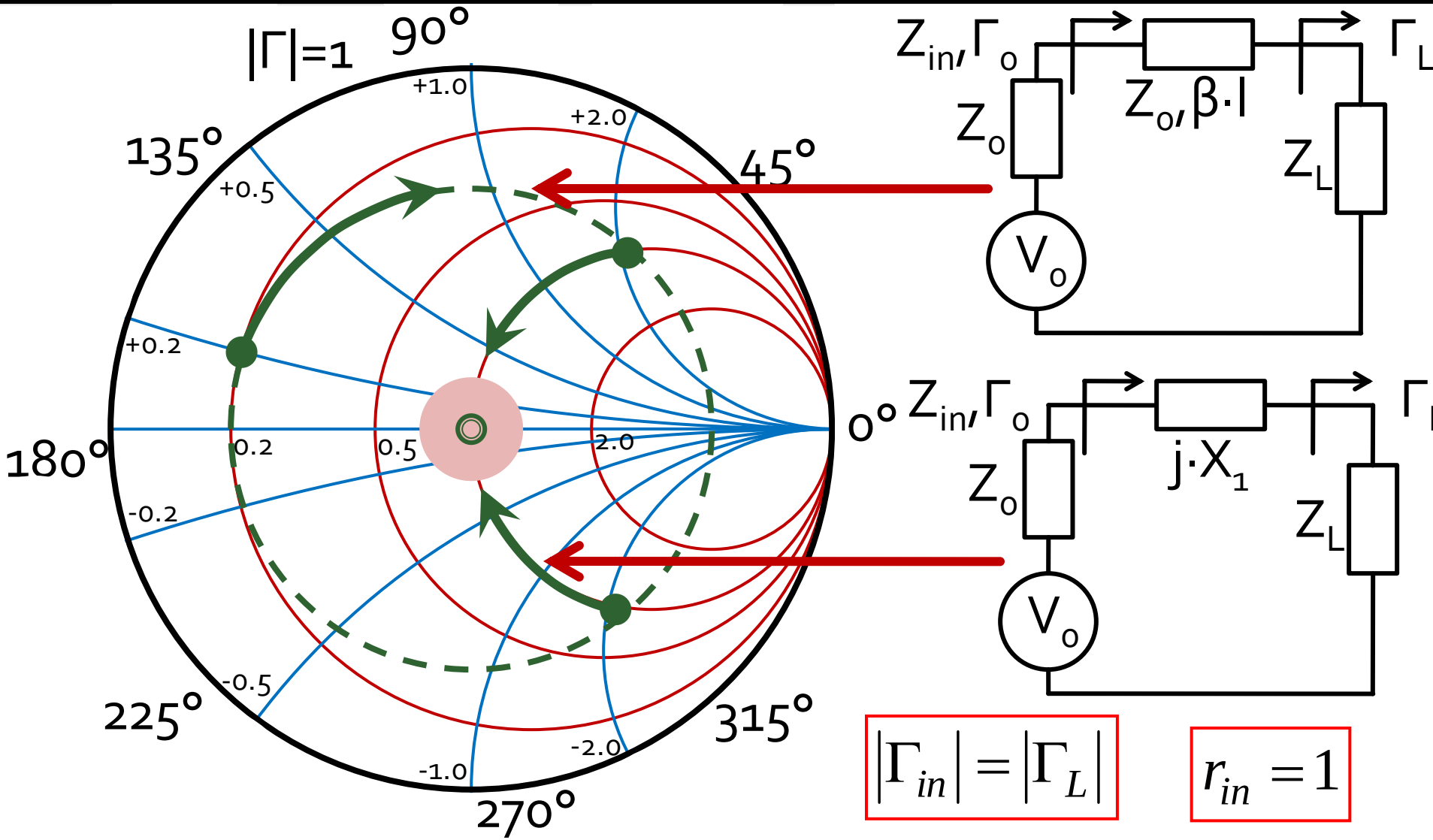

$$\boxed{|\Gamma_{in}| = |\Gamma_L|}$$

$$\boxed{r_{in} = 1}$$

Calcul analitic (calcul efectiv)

$$\boxed{\cos(\varphi + 2\theta) = |\Gamma_S|}$$

$$\boxed{\theta_{ss} = \beta \cdot l = \cot^{-1} \frac{\mp 2 \cdot |\Gamma_S|}{\sqrt{1 - |\Gamma_S|^2}}}$$

$$\Gamma_S = 0.555\angle -29.92^\circ$$

$$|\Gamma_S| = 0.555; \quad \varphi = -29.92^\circ \qquad \cos(\varphi + 2\theta) = 0.555 \Rightarrow (\varphi + 2\theta) = \pm 56.28^\circ$$

- **Semnul** (+/-) solutiei alese la ecuatia **liniei serie** impune **semnul** solutiei utilizate la ecuatia **stub-ului serie**
  - **solutia "cu +"**

$$(-29.92^\circ + 2\theta) = +56.28^\circ \qquad \theta = 43.1^\circ \qquad \operatorname{Im} z_S = \frac{+2 \cdot |\Gamma_S|}{\sqrt{1 - |\Gamma_S|^2}} = +1.335$$

$$\theta_{ss} = -\cot^{-1}(\operatorname{Im} z_S) = -36.8^\circ \underline{(+180^\circ)} \rightarrow \theta_{ss} = 143.2^\circ$$

  - **solutia "cu -"**

$$(-29.92^\circ + 2\theta) = -56.28^\circ \qquad \theta = -13.2^\circ \underline{(+180^\circ)} \rightarrow \theta = 166.8^\circ$$

$$\operatorname{Im} z_S = \frac{-2 \cdot |\Gamma_S|}{\sqrt{1 - |\Gamma_S|^2}} = -1.335 \qquad \theta_{ss} = -\cot^{-1}(\operatorname{Im} z_S) = 36.8^\circ$$

Calcul analitic (calcul efectiv)

$$(\varphi+2\theta)=\begin{cases}+56.28^\circ\\-56.28^\circ\end{cases}\quad \theta=\begin{cases}43.1^\circ\\166.8^\circ\end{cases}\quad \mathrm{Im}[z_S(\theta)]=\begin{cases}+1.335\\-1.335\end{cases}\quad \theta_{ss}=\begin{cases}-36.8^\circ+180^\circ=143.2^\circ\\+36.8^\circ\end{cases}$$

- Se alege **una** din cele doua solutii posibile
- **Semnul** (+/-) solutiei alese la **prima** ecuatie impune **semnul** solutiei utilizate la a **doua** ecuatie

$$l_1=\frac{43.1^\circ}{360^\circ}\cdot\lambda=0.120\cdot\lambda$$

$$l_2=\frac{143.2^\circ}{360^\circ}\cdot\lambda=0.398\cdot\lambda$$

$$l_1=\frac{166.8^\circ}{360^\circ}\cdot\lambda=0.463\cdot\lambda$$

$$l_2=\frac{36.8^\circ}{360^\circ}\cdot\lambda=0.102\cdot\lambda$$

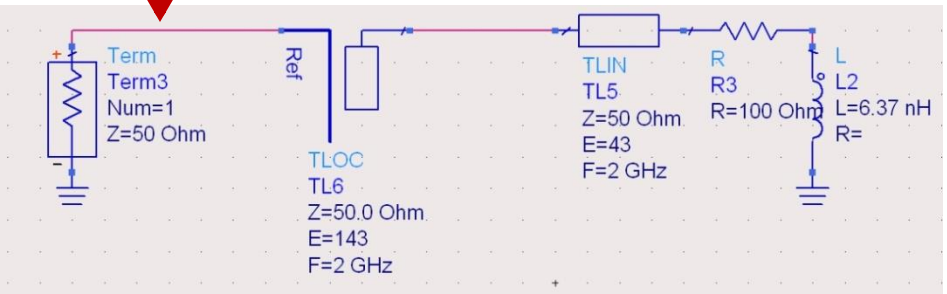

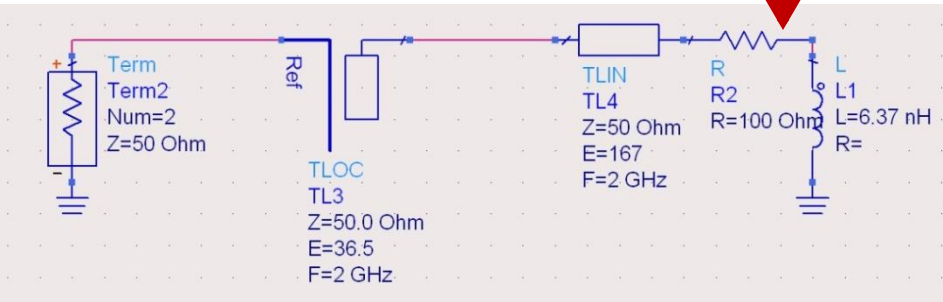

Stub, observatii

- adunarea si scadere de **180°** (λ/2) nu schimba rezultatul (rotatie completa in jurul diagramei

$$E = \beta \cdot l = \pi = 180° \qquad l = k \cdot \frac{\lambda}{2}, \forall k \in \mathbf{N}$$

  - pentru linii de "lungime" / "lungime electrica" **negative** se adauga λ/2 / 180° pentru a avea valoare pozitiva (realizabila fizic)
- o adaugare sau scadere de **90°** (λ/4) transforma impedanta stub-ului:

$$Z_{in,sc} = j \cdot Z_0 \cdot \tan \beta \cdot l \quad \Leftrightarrow \quad Z_{in,g} = -j \cdot Z_0 \cdot \cot \beta \cdot l$$

  - pentru stub se poate adauga/scadea 90° (λ/4) simultan cu schimbare **gol** ⇔ **scurtcircuit**

Double stub tuning

Adaptarea cu doua sectiuni de linie

Adaptarea cu doua sectiuni de linie

- Double stub tuning
- Se foloseste o lungime constanta de linie intre 2 stub-uri

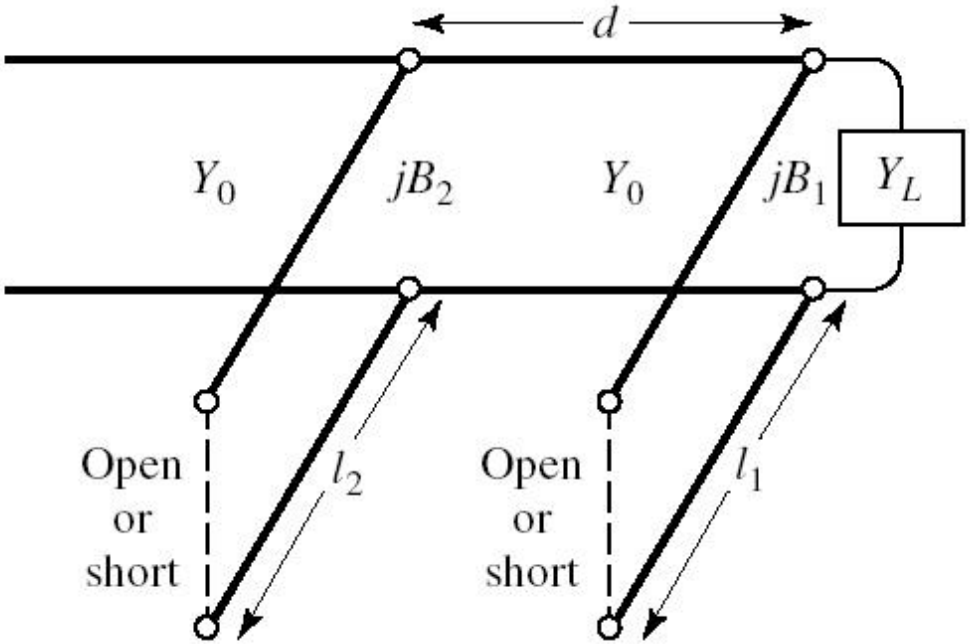

Adaptarea cu doua sectiuni de linie

- Doua solutii posibile

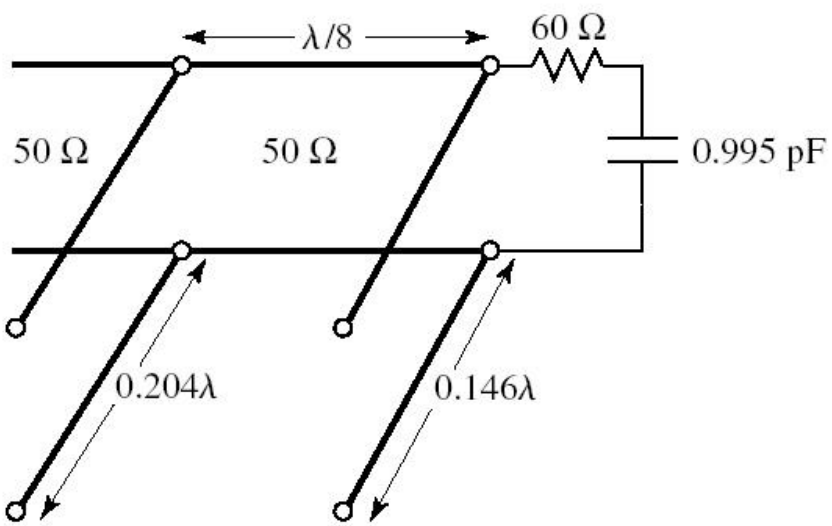

Solution 1

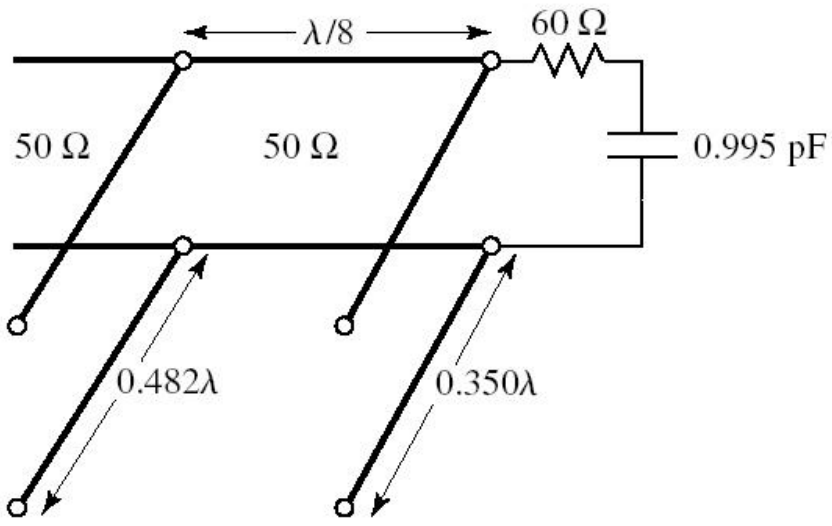

Solution 2

Adaptarea cu doua sectiuni de linie

- Doua solutii posibile

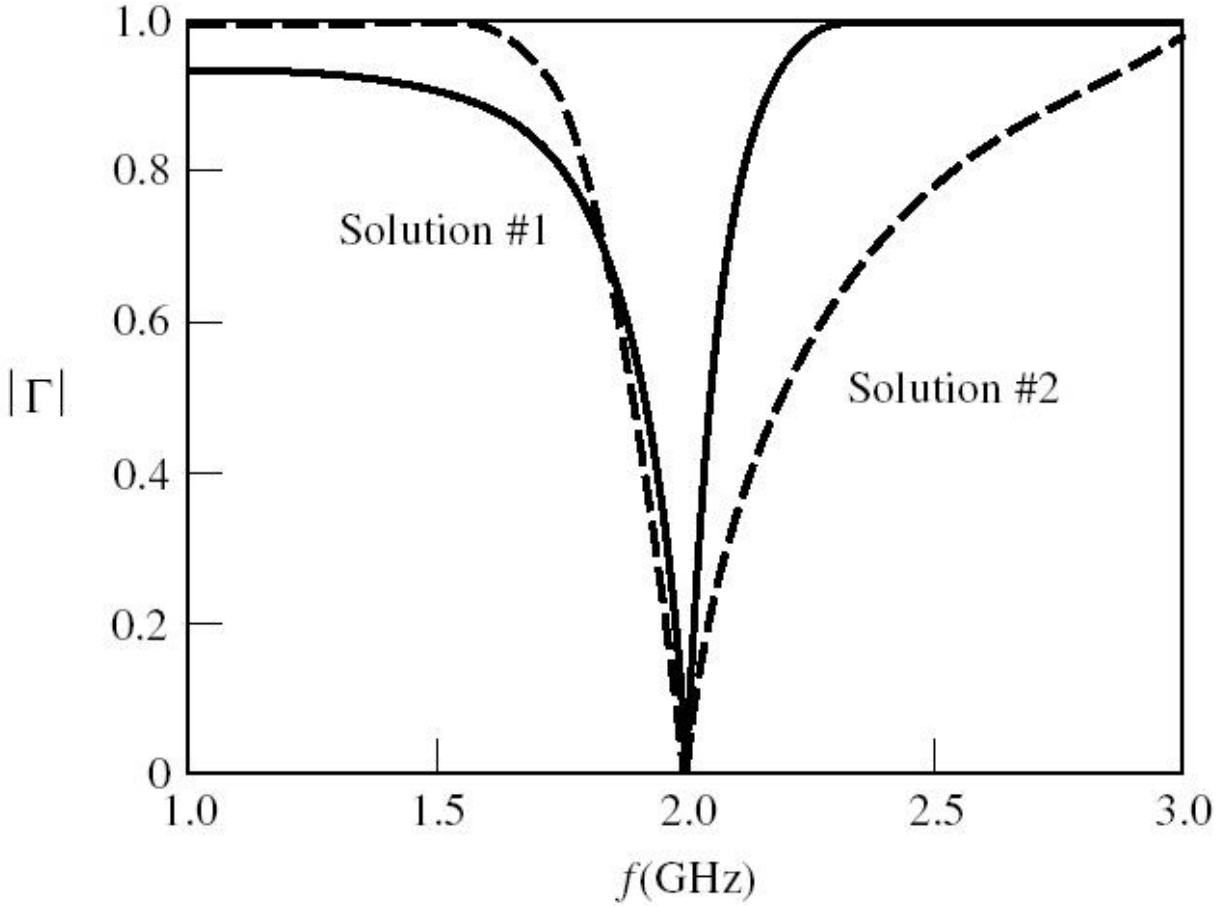

Adaptarea cu doua sectiuni de linie

- Tipic d=λ/8 sau d=3λ/8
- **Nu** pentru orice sarcina este posibila
  - decat daca se poate introduce o sectiune de linie pana la sarcina

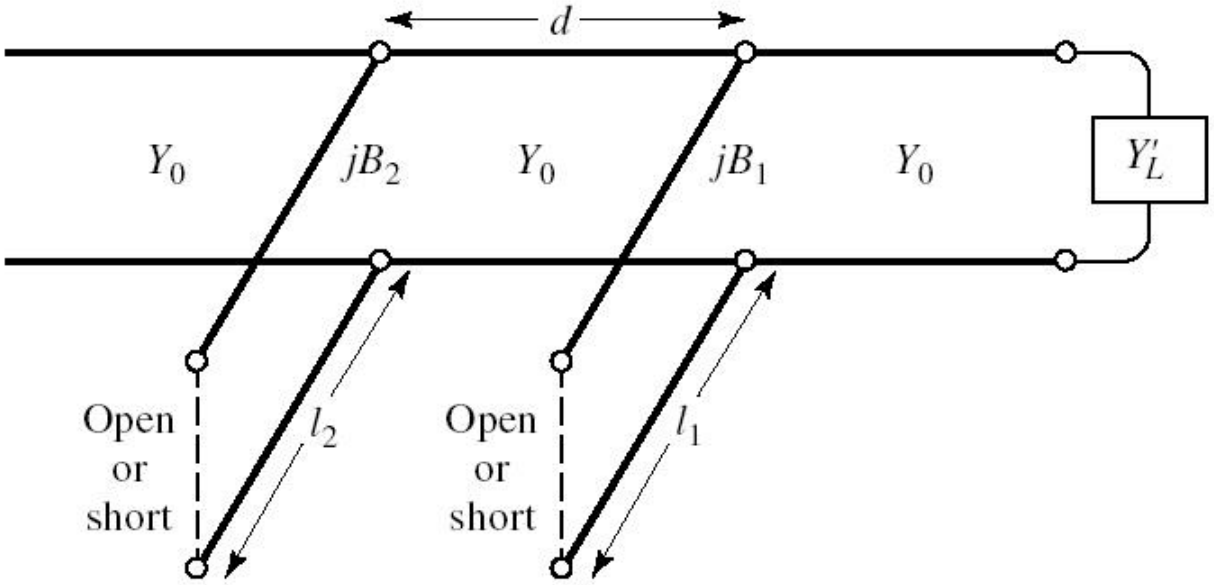

Adaptarea cu sectiuni de linie

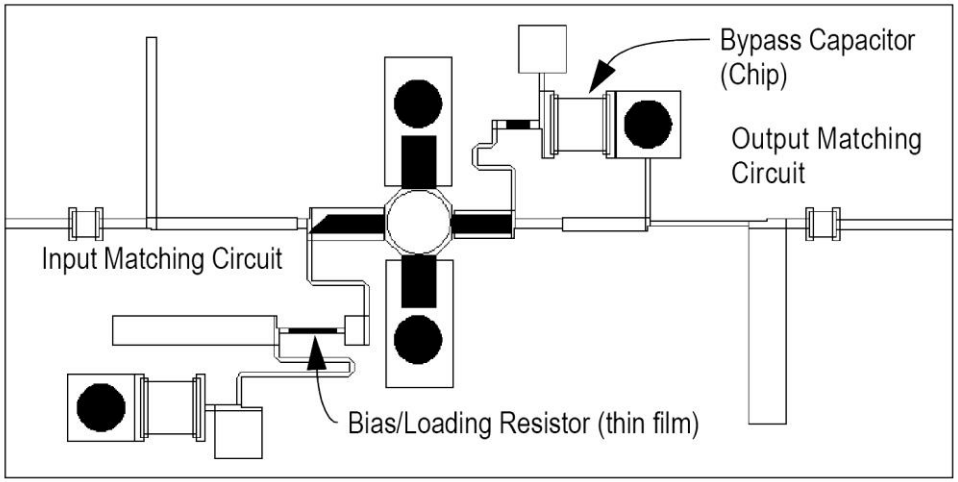

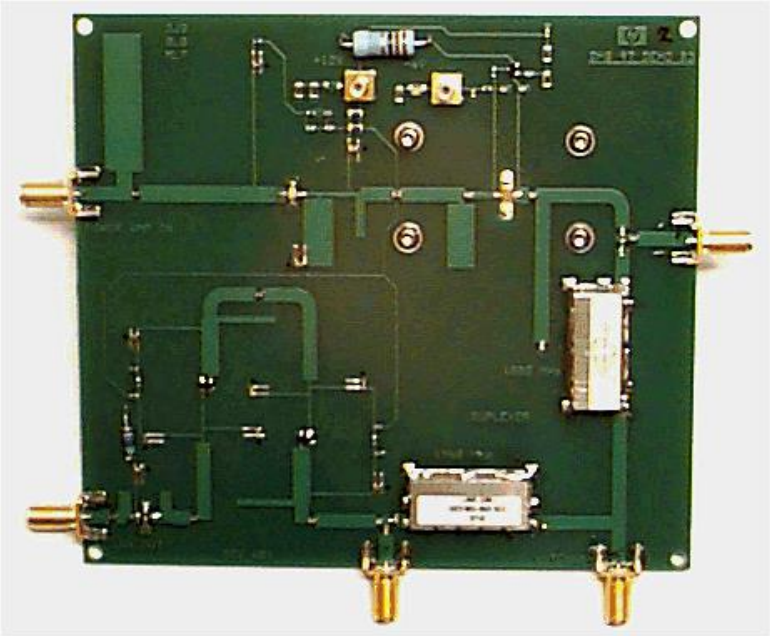

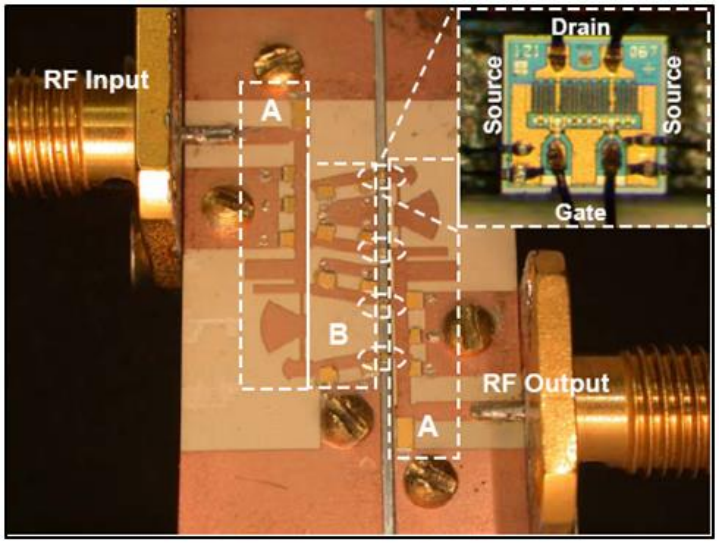

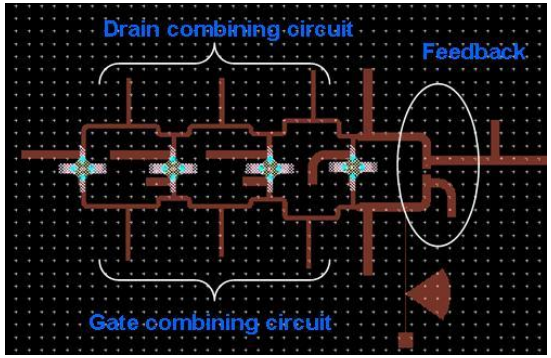

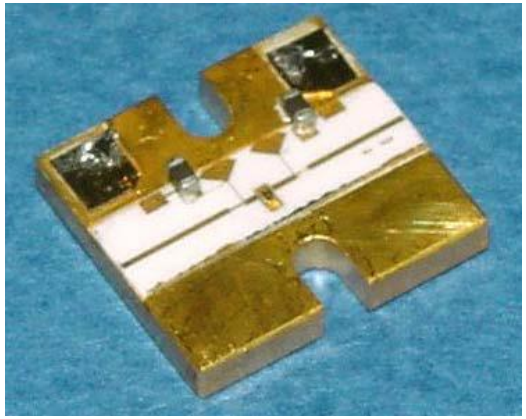

Contact

- Laboratorul de microunde si optoelectronica
- http://rf-opto.etti.tuiasi.ro
- rdamian@etti.tuiasi.ro